DATASHEET

EVERLIGHT AUTOMOTIVE

EL 1608
1608-IB0100M-AM



Features

- Package: PLCC 2 package
- Color: Ice Blue
- Typical luminous intensity : 650 mcd @ 10mA
- Viewing angle : 120°
- ESD : up to 2KV
- MSL : 2a
- Qualifications：According to AEC-Q101
- Compliance with RoHS & REACH
- Compliance Halogen Free. (Br<900ppm,Cl<900ppm,Br+Cl<1500ppm)

Applications

- Automotive Interior Lighting.

Copyright © 2016, Everlight All Rights Reserved. Release Date: Nov.18.2021 Issue No: DSE-00 Ver.1

Ver.:1 Release Date:03/18/2022 狀態:Approved(正式發行)

Contents

1.Characteristics 3
2.Absolute Maximum Ratings 4
3.Characteristics Graph 5
4.Binning Information 10
5.Part Number 17
6.Ordering Information 18
7.Mechanical Dimension 19
8.Recommended Soldering Pad 20
9.Reflow Soldering Profile 20
10.Packaging Information 21
11.Precaution for Use 23

EVERLIGHT

Copyright © 2019, Everlight All Rights Reserved. Release Date: Mar.07.2022 Issue No: DSE-0027238 Ver.1
Ver.:1 Release Date:03/18/2022 狀態:Approved(正式發行)

1. Characteristics

Parameter		Symbol	Min.	Typ.	Max.	Unit	Condition
Forward Current		I_F	2	10	20	mA	---
Luminous Intensity[1][2]		IV	330	650	970	mcd	I_F=10mA
Forward Voltage[3]		V_F	2.5	3.00	3.5	V	I_F=10mA
Viewing Angle		φ	---	120	---	deg	I_F=10mA
Color[4]		CIE x	---	0.20	---	---	I_F=10mA
		CIE y	---	0.25	---	---	I_F=10mA
Thermal Resistance (Junction to Solder)	Real	$R_{th\ JS\ real}$	---	160	---	K/W	I_F=10mA
	Electrical	$R_{th\ JS\ el}$	---	140	---		

Notes:

1. Luminous Intensity measurement tolerance: ±8%.
2. The data of Luminous Intensity measured at thermal pad=25°C
3. Forward voltage measurement tolerance: ±0.05V
4. Tolerance of Chromaticity Coordinates x,y ±0.0 05

EVERLIGHT

Copyright © 2019, Everlight All Rights Reserved. Release Date: Mar.07.2022 Issue No: DSE-0027238 Ver.1
Ver.:1 Release Date:03/18/2022 狀態:Approved(正式發行)

2. Absolute Maximum Ratings

Parameter	Symbol	Ratings	Unit
Power Dissipation	P_d	70	mW
Forward Current	I_F	20	mA
Surge Current (t<=10 μs; D=0.005; T_s=25 ℃)	I_{FM}	50	mA
Reverse Voltage	V_R	Not designed for reverse operation	V
Junction Temperature	T_J	125	°C
Operating Temperature	T_{opr}	-40 ~ +110	°C
Storage Temperature	T_{stg}	-40 ~ +110	°C
ESD Sensitivity (R=1.5kΩ, C= 100pF)	ESD_{HBM}	2	kV
Soldering Temperature	Reflow	260°C for 30sec	°C

EVERLIGHT

Copyright © 2019, Everlight All Rights Reserved. Release Date: Mar.07.2022 Issue No: DSE-0027238 Ver.1

Ver.:1 Release Date:03/18/2022 狀態:Approved(正式發行)

3. Characteristics Graph

Wavelength Characteristics Relative Spectral Distribution
@ Ts = 25°C, I_F=10mA

$$\Phi_V/\Phi_V\,(Max.) = f(\lambda)$$

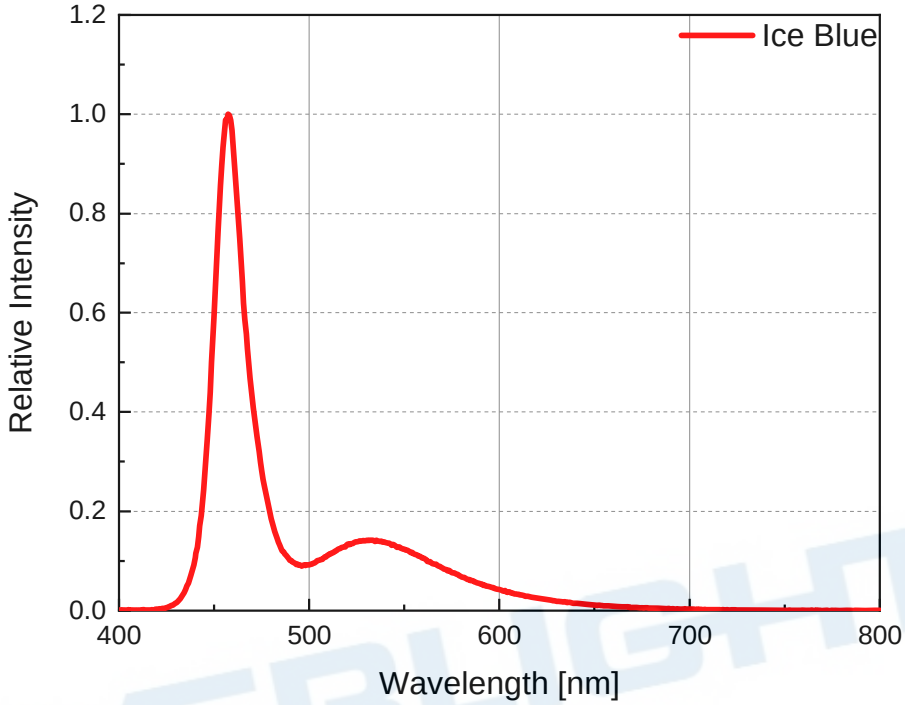

Typical Diagram Characteristics of Radiation

$$\Phi_V/\Phi_V\,(0^\circ) = f(\varphi)$$

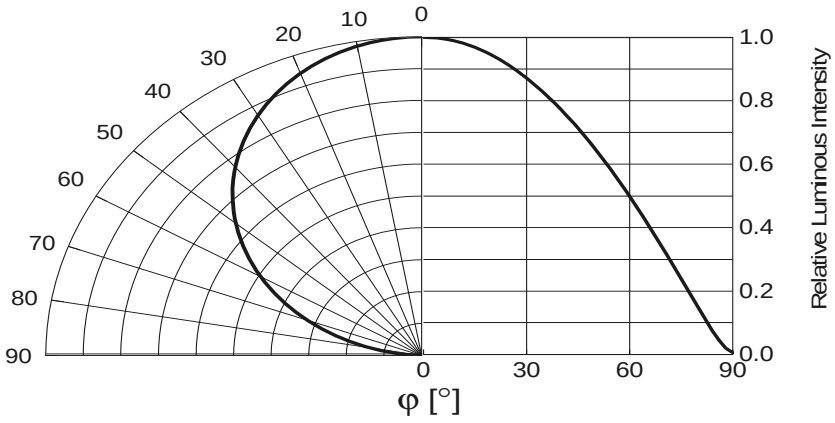

Notes:

1. φ is the off axis angle from lamp centerline where the luminous intensity is 1/2 of the peak value.
2. View angle tolerance is ± 5°.

Copyright © 2019, Everlight All Rights Reserved. Release Date: Mar.07.2022 Issue No: DSE-0027238 Ver.1
Ver.:1 Release Date:03/18/2022 狀態:Approved(正式發行)

Forward Current vs. Forward Voltage
@ Ts = 25°C

$$I_F = f(V_F)$$

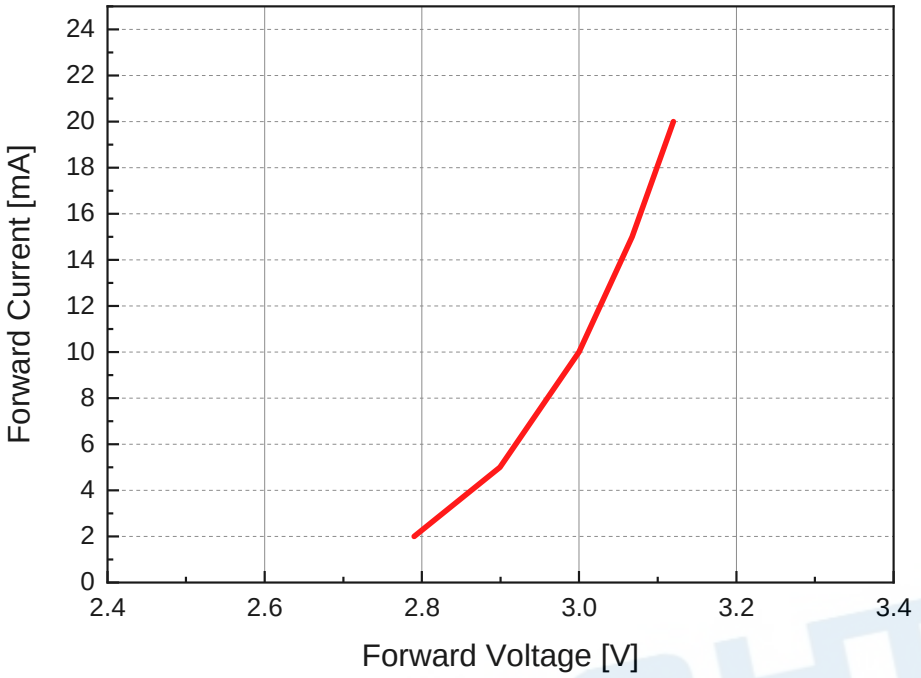

Relative Luminous Intensity vs. Forward Current
@ Ts = 25°C

$I_V/I_{V(10mA)} = f(I_F)$

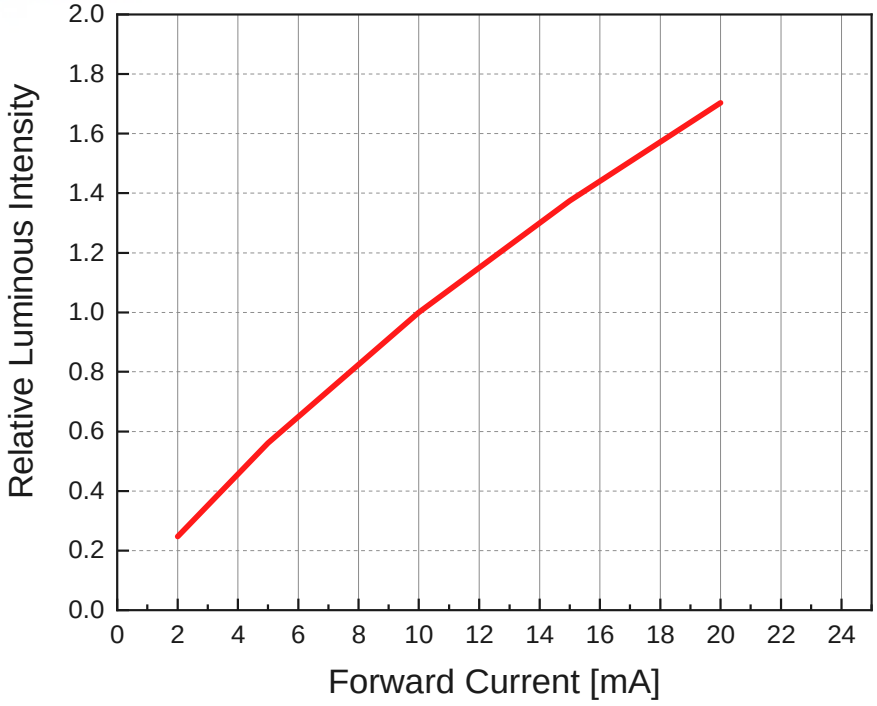

Copyright © 2019, Everlight All Rights Reserved. Release Date: Mar.07.2022 Issue No: DSE-0027238 Ver.1
Ver.:1 Release Date:03/18/2022 狀態:Approved(正式發行)

Chromaticity Coordinates Shift vs. Forward Current

@ Ts = 25°C

$$\triangle CIE\ x, \triangle CIE\ y = f(I_F)$$

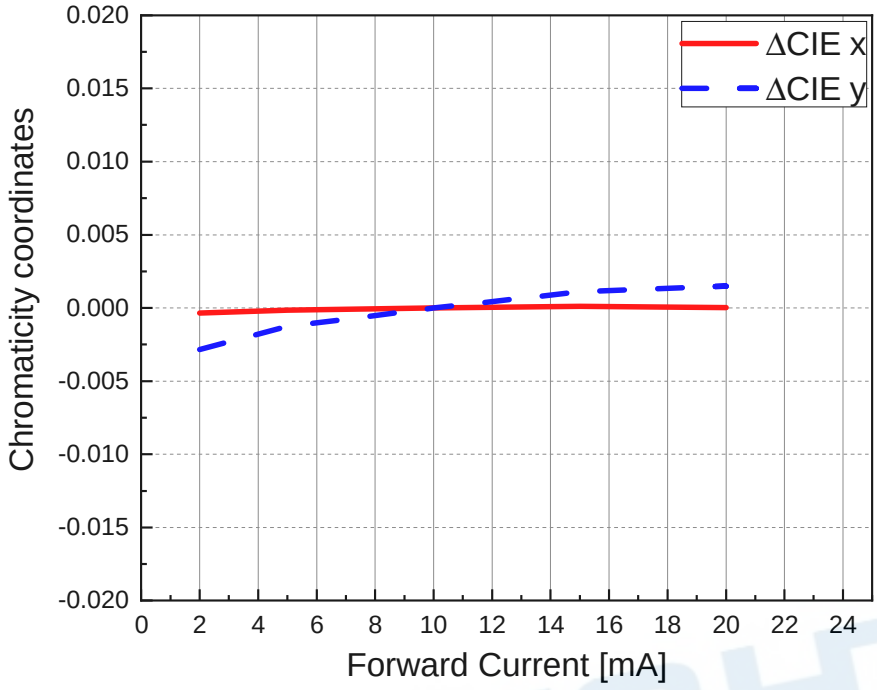

Relative Forward Voltage vs. Junction Temperature

@ I_F=10mA

$$\Delta V_F = V_F - V_F(25^\circ C) = f(T_j)$$

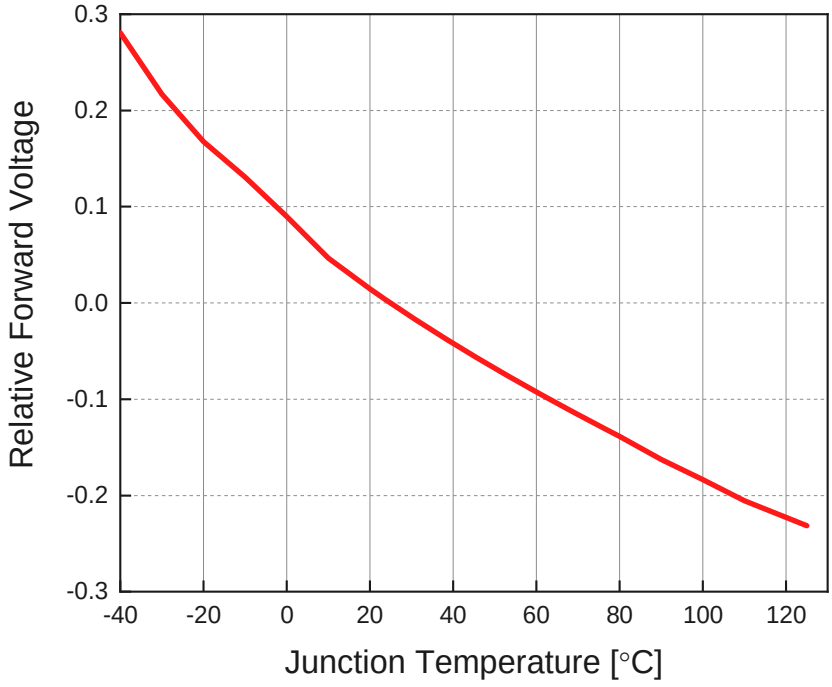

Copyright © 2019, Everlight All Rights Reserved. Release Date: Mar.07.2022 Issue No: DSE-0027238 Ver.1
Ver.:1 Release Date:03/18/2022 狀態:Approved(正式發行)

Relative Luminous Intensity vs. Junction Temperature

@ I_F=10mA

$$\Phi_V / \Phi_V(25^\circ C) = f(T_j)$$

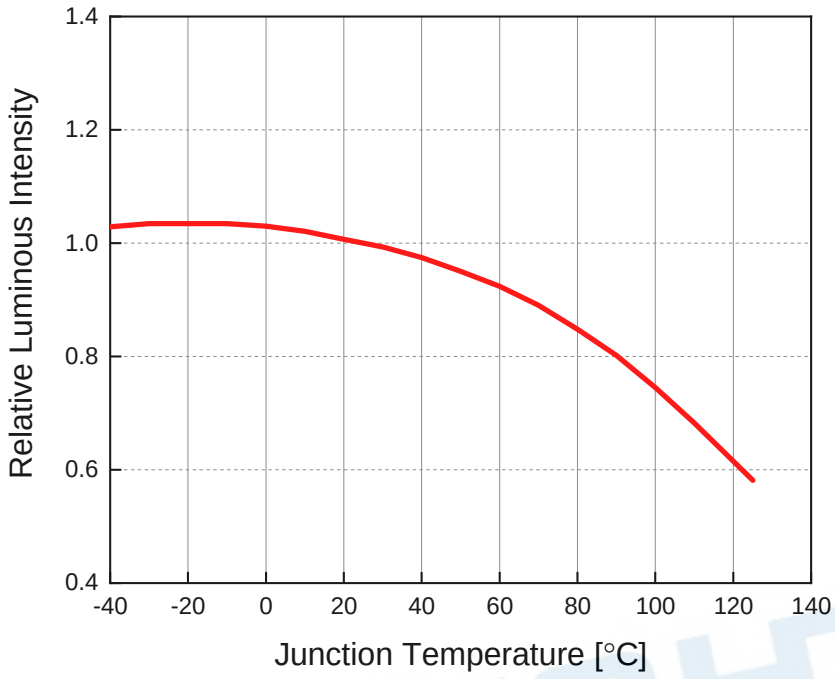

Chromaticity Coordinates Shift vs. Junction Temperature

@ I_F=10mA

$$\triangle CIE\ x, \triangle CIE\ y = f(T_j)$$

Copyright © 2019, Everlight All Rights Reserved. Release Date: Mar.07.2022 Issue No: DSE-0027238 Ver.1

Ver.:1 Release Date:03/18/2022 狀態:Approved(正式發行)

Forward Current Derating Curve

$$I_F = f(T_S)$$

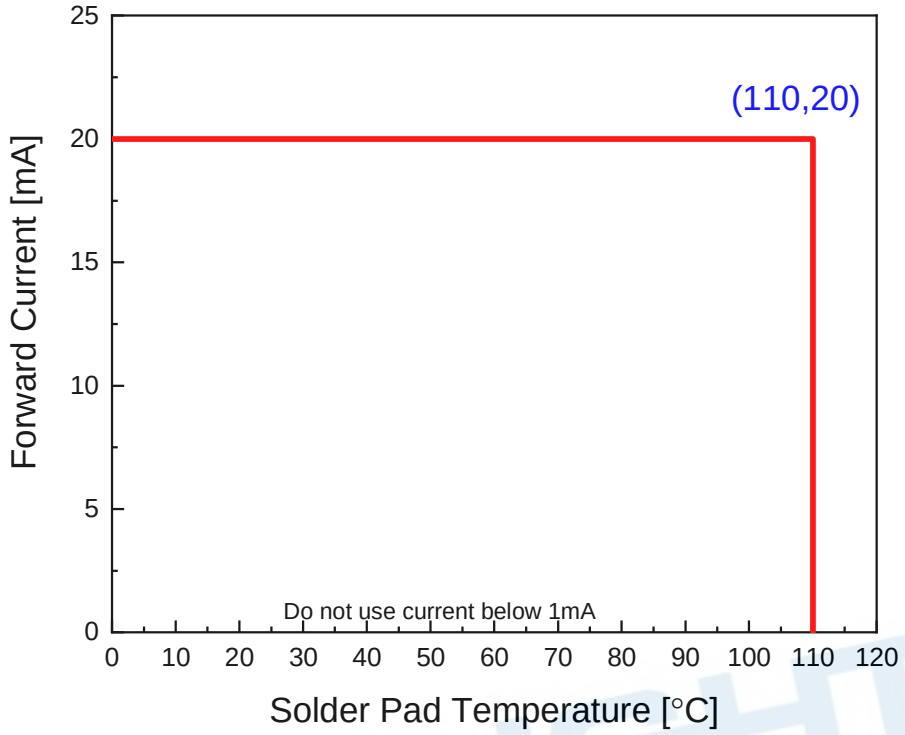

Permissible Pulse Handling Capability

D=Duty cycle , T_s = 25℃

Copyright © 2019, Everlight All Rights Reserved. Release Date: Mar.07.2022 Issue No: DSE-0027238 Ver.1

Ver.:1 Release Date:03/18/2022 狀態:Approved(正式發行)

4. Binning Information

Luminous Intensity Bins

Group	Bin	Minimum Luminous Intensity (mcd)	Maximum Luminous Intensity (mcd)
Q	X	71	82
	Y	82	97
	Z	97	112
R	X	112	130
	Y	130	150
	Z	150	180
S	X	180	210
	Y	210	240
	Z	240	280
T	X	280	330
	Y	330	390
	Z	390	450
U	X	450	520
	Y	520	610
	Z	610	710
V	X	710	820
	Y	820	970
	Z	970	1120
A	X	1120	1300
	Y	1300	1500
	Z	1500	1800
B	X	1800	2100
	Y	2100	2400
	Z	2400	2800

1. Luminous intensity measurement tolerance: ±8%.

Copyright © 2019, Everlight All Rights Reserved. Release Date: Mar.07.2022 Issue No: DSE-0027238 Ver.1
Ver.:1 Release Date:03/18/2022 狀態:Approved(正式發行)

Ice Blue Color Bin Structure

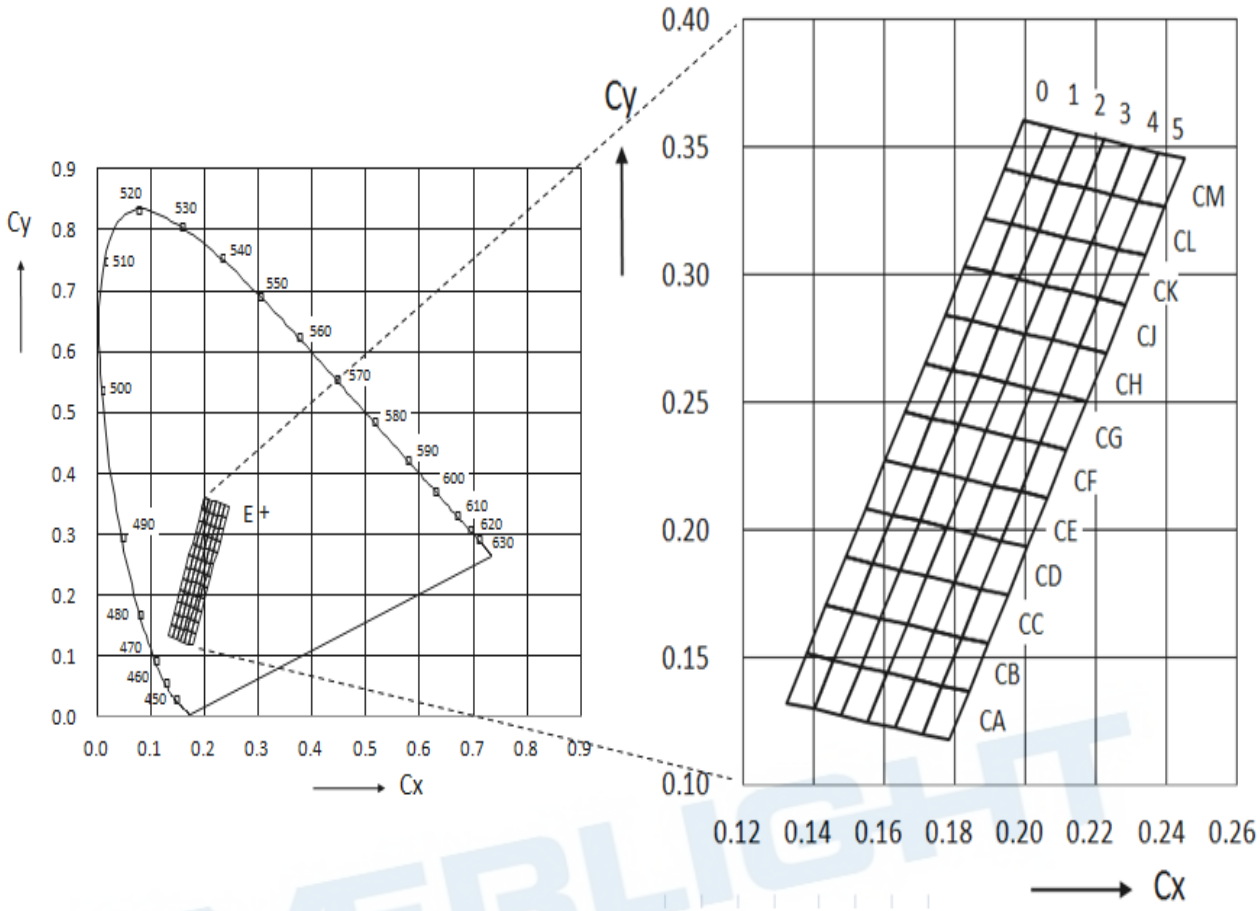

Bin Code	CIE_x	CIE_y	Bin Code	CIE_x	CIE_y	Condition
CM0	0.1940	0.3415	CL3	0.2112	0.3151	I_F = 10mA
	0.1996	0.3605		0.2168	0.3341	
	0.2072	0.3580		0.2244	0.3316	
	0.2016	0.3390		0.2188	0.3126	
CM1	0.2016	0.3390	CL4	0.2188	0.3126	
	0.2072	0.3580		0.2244	0.3316	
	0.2148	0.3556		0.2319	0.3291	
	0.2092	0.3366		0.2264	0.3101	
CM2	0.2092	0.3366	CL5	0.2264	0.3101	
	0.2148	0.3556		0.2319	0.3291	
	0.2224	0.3531		0.2395	0.3267	
	0.2168	0.3341		0.2340	0.3077	

Copyright © 2019, Everlight All Rights Reserved. Release Date: Mar.07.2022 Issue No: DSE-0027238 Ver.1
Ver.:1 Release Date:03/18/2022 狀態:Approved(正式發行)

Bin Code	CIE_x	CIE_y	Bin Code	CIE_x	CIE_y	Condition
CM3	0.2168	0.3341	CK0	0.1828	0.3035	I_F = 10mA
	0.2224	0.3531		0.1884	0.3225	
	0.2299	0.3506		0.1960	0.3200	
	0.2244	0.3316		0.1904	0.3010	
CM4	0.2244	0.3316	CK1	0.1904	0.3010	
	0.2299	0.3506		0.1960	0.3200	
	0.2375	0.3481		0.2036	0.3176	
	0.2319	0.3291		0.1980	0.2986	
CM5	0.2319	0.3291	CK2	0.1980	0.2986	
	0.2375	0.3481		0.2036	0.3176	
	0.2451	0.3457		0.2112	0.3151	
	0.2395	0.3267		0.2056	0.2961	
CL0	0.1884	0.3225	CK3	0.2056	0.2961	
	0.1940	0.3415		0.2112	0.3151	
	0.2016	0.3390		0.2188	0.3126	
	0.1960	0.3200		0.2132	0.2936	
CL1	0.1960	0.3200	CK4	0.2132	0.2936	
	0.2016	0.3390		0.2188	0.3126	
	0.2092	0.3366		0.2264	0.3101	
	0.2036	0.3176		0.2208	0.2911	
CL2	0.2036	0.3176	CK5	0.2208	0.2911	
	0.2092	0.3366		0.2264	0.3101	
	0.2168	0.3341		0.2340	0.3077	
	0.2112	0.3151		0.2284	0.2887	
CJ0	0.1772	0.2845	CH3	0.1945	0.2581	
	0.1828	0.3035		0.2000	0.2771	
	0.1904	0.3010		0.2077	0.2746	
	0.1848	0.2820		0.2021	0.2556	
CJ1	0.1848	0.2820	CH4	0.2021	0.2556	
	0.1904	0.3010		0.2077	0.2746	
	0.1980	0.2986		0.2153	0.2721	
	0.1924	0.2796		0.2097	0.2531	

Copyright © 2019, Everlight All Rights Reserved. Release Date: Mar.07.2022 Issue No: DSE-0027238 Ver.1
Ver.:1 Release Date:03/18/2022 狀態:Approved(正式發行)

Bin Code	CIE_x	CIE_y	Bin Code	CIE_x	CIE_y	Condition
CJ2	0.1924	0.2796	CH5	0.2097	0.2531	I_F = 10mA
	0.1980	0.2986		0.2153	0.2721	
	0.2056	0.2961		0.2229	0.2697	
	0.2000	0.2771		0.2173	0.2507	
CJ3	0.2000	0.2771	CG0	0.1660	0.2465	
	0.2056	0.2961		0.1716	0.2655	
	0.2132	0.2936		0.1792	0.2630	
	0.2077	0.2746		0.1736	0.2440	
CJ4	0.2077	0.2746	CG1	0.1736	0.2440	
	0.2132	0.2936		0.1792	0.2630	
	0.2208	0.2911		0.1869	0.2606	
	0.2153	0.2721		0.1813	0.2416	
CJ5	0.2153	0.2721	CG2	0.1813	0.2416	
	0.2208	0.2911		0.1869	0.2606	
	0.2284	0.2887		0.1945	0.2581	
	0.2229	0.2697		0.1889	0.2391	
CH0	0.1716	0.2655	CG3	0.1889	0.2391	
	0.1772	0.2845		0.1945	0.2581	
	0.1848	0.2820		0.2021	0.2556	
	0.1792	0.2630		0.1965	0.2366	
CH1	0.1792	0.2630	CG4	0.1965	0.2366	
	0.1848	0.2820		0.2021	0.2556	
	0.1924	0.2796		0.2097	0.2531	
	0.1869	0.2606		0.2043	0.2341	
CH2	0.1869	0.2606	CG5	0.2043	0.2341	
	0.1924	0.2796		0.2097	0.2531	
	0.2000	0.2771		0.2173	0.2507	
	0.1945	0.2581		0.2118	0.2317	
CF0	0.1604	0.2275	CE3	0.1777	0.2011	
	0.1660	0.2465		0.1833	0.2201	
	0.1736	0.2440		0.1909	0.2176	
	0.1680	0.2250		0.1854	0.1986	

Copyright © 2019, Everlight All Rights Reserved. Release Date: Mar.07.2022 Issue No: DSE-0027238 Ver.1
Ver.:1 Release Date:03/18/2022 狀態:Approved(正式發行)

Bin Code	CIE_x	CIE_y	Bin Code	CIE_x	CIE_y	Condition
CF1	0.1680	0.2250	CE4	0.1854	0.1986	I_F = 10mA
	0.1736	0.2440		0.1909	0.2176	
	0.1813	0.2416		0.1986	0.2151	
	0.1757	0.2226		0.1930	0.1961	
CF2	0.1757	0.2226	CE5	0.1930	0.1961	
	0.1813	0.2416		0.1986	0.2151	
	0.1889	0.2391		0.2062	0.2127	
	0.1833	0.2201		0.2007	0.1937	
CF3	0.1833	0.2201	CD0	0.1492	0.1895	
	0.1889	0.2391		0.1548	0.2085	
	0.1965	0.2366		0.1624	0.2060	
	0.1909	0.2176		0.1568	0.1870	
CF4	0.1909	0.2176	CD1	0.1568	0.1870	
	0.1965	0.2366		0.1624	0.2060	
	0.2043	0.2341		0.1701	0.2036	
	0.1986	0.2151		0.1645	0.1846	
CF5	0.1986	0.2151	CD2	0.1645	0.1846	
	0.2043	0.2341		0.1701	0.2036	
	0.2118	0.2317		0.1777	0.2011	
	0.2062	0.2127		0.1721	0.1821	
CE0	0.1548	0.2085	CD3	0.1721	0.1821	
	0.1604	0.2275		0.1777	0.2011	
	0.1680	0.2250		0.1854	0.1986	
	0.1624	0.2060		0.1798	0.1796	
CE1	0.1624	0.2060	CD4	0.1798	0.1796	
	0.1680	0.2250		0.1854	0.1986	
	0.1757	0.2226		0.1930	0.1961	
	0.1701	0.2036		0.1875	0.1771	
CE2	0.1701	0.2036	CD5	0.1875	0.1771	
	0.1757	0.2226		0.1930	0.1961	
	0.1833	0.2201		0.2007	0.1937	
	0.1777	0.2011		0.1951	0.1747	
CC0	0.1436	0.1705	CB3	0.1610	0.1441	
	0.1492	0.1895		0.1666	0.1631	
	0.1568	0.1870		0.1742	0.1606	
	0.1513	0.1680		0.1687	0.1416	

Copyright © 2019, Everlight All Rights Reserved. Release Date: Mar.07.2022 Issue No: DSE-0027238 Ver.1

Ver.:1 Release Date:03/18/2022 狀態:Approved(正式發行)

Bin Code	CIE_x	CIE_y	Bin Code	CIE_x	CIE_y	Condition
CC1	0.1513	0.1680	CB4	0.1687	0.1416	I_F = 10mA
	0.1568	0.1870		0.1742	0.1606	
	0.1645	0.1846		0.1819	0.1581	
	0.1589	0.1656		0.1764	0.1391	
CC2	0.1589	0.1656	CB5	0.1764	0.1391	
	0.1645	0.1846		0.1819	0.1581	
	0.1721	0.1821		0.1896	0.1557	
	0.1666	0.1631		0.1840	0.1367	
CC3	0.1666	0.1631	CA0	0.1324	0.1325	
	0.1721	0.1821		0.1380	0.1515	
	0.1798	0.1796		0.1457	0.1490	
	0.1742	0.1606		0.1401	0.1300	
CC4	0.1742	0.1606	CA1	0.1401	0.1300	
	0.1798	0.1796		0.1457	0.1490	
	0.1875	0.1771		0.1533	0.1466	
	0.1819	0.1581		0.1477	0.1276	
CC5	0.1819	0.1581	CA2	0.1477	0.1276	
	0.1875	0.1771		0.1533	0.1466	
	0.1951	0.1747		0.1610	0.1441	
	0.1896	0.1557		0.1554	0.1251	
CB0	0.1380	0.1515	CA3	0.1554	0.1251	
	0.1436	0.1705		0.1610	0.1441	
	0.1513	0.1680		0.1687	0.1416	
	0.1457	0.1490		0.1631	0.1226	
CB1	0.1457	0.1490	CA4	0.1631	0.1226	
	0.1513	0.1680		0.1687	0.1416	
	0.1589	0.1656		0.1764	0.1391	
	0.1533	0.1466		0.1708	0.1201	
CB2	0.1533	0.1466	CA5	0.1708	0.1201	
	0.1589	0.1656		0.1764	0.1391	
	0.1666	0.1631		0.1840	0.1367	
	0.1610	0.1441		0.1785	0.1177	

Notes:

1. Tolerance of Chromaticity Coordinates x,y：±0.005

Copyright © 2019, Everlight All Rights Reserved. Release Date: Mar.07.2022 Issue No: DSE-0027238 Ver.1

Ver.:1 Release Date:03/18/2022 狀態:Approved(正式發行)

Forward Voltage Bins

Bin	Minimum Forward Voltage [V]	Maximum Forward Voltage [V]
1012	1.00	1.25
1215	1.25	1.75
1517	1.50	1.75
1720	1.75	2.00
2022	2.00	2.25
2225	2.25	2.50
2527	2.50	2.75
2730	2.75	3.00
3032	3.00	3.25
3235	3.25	3.50
3537	3.50	3.75
3740	3.75	4.00
4042	4.00	4.25
4245	4.25	4.50
4547	4.50	4.75
4750	4.75	5.00
5052	5.00	5.25
5255	5.25	5.50
5557	5.50	5.75
5760	5.75	6.00
6062	6.00	6.25
6265	6.25	6.50
6567	6.50	6.75
6770	6.75	7.00

Notes:

1. Forward voltage measurement tolerance: ±0.05V.

Copyright © 2019, Everlight All Rights Reserved. Release Date: Mar.07.2022 Issue No: DSE-0027238 Ver.1
Ver.:1 Release Date:03/18/2022 狀態:Approved(正式發行)

5. Part Number

1608-IB0100M-AM

Part number is designated with below details.

1608= Product family name.

IB = Color [1]

010 = Test current [mA]

0 = internal code

M = Brightness Level (H=High ; M=Medium ; L=Low)

AM = automotive application

Note

[1] Color：

Symbol	Description
C	Cool White
N	Neutral White
W	Warm White
PA	Phosphor Converted Amber
PR	Phosphor Converted Red
UB	Blue
IB	Ice Blue
SB	Sky Blue
UP	Purple
UG	Green
UY	Yellow
UA	Amber
UR	Red
SR	Super Red
RGB	RGB-Color
RGBY	RGBY-Color

Copyright © 2019, Everlight All Rights Reserved. Release Date: Mar.07.2022 Issue No: DSE-0027238 Ver.1

Ver.:1 Release Date:03/18/2022 狀態:Approved(正式發行)

6. Ordering Information

1608-IB0100M-ABCDEFGHJKLMNO-PQ-AM

Part Number of the EL Mini Top View LED	Order Code
1608-IB0100M-AM	1608-IB0100M-CC5CB4UYVX2535-2T-AM(TL)

Order code contains information with below details：

ABCDEF = min/max wavelength or CCT

GHJK = min./max. luminous flux in [lm] or luminous intensity in [mcd]

LMNO = min./max. forward voltage

PQ =Internal code

AM = Automotive Application

Copyright © 2019, Everlight All Rights Reserved. Release Date: Mar.07.2022 Issue No: DSE-0027238 Ver.1

Ver.:1 Release Date:03/18/2022 狀態:Approved(正式發行)

7. Mechanical Dimension

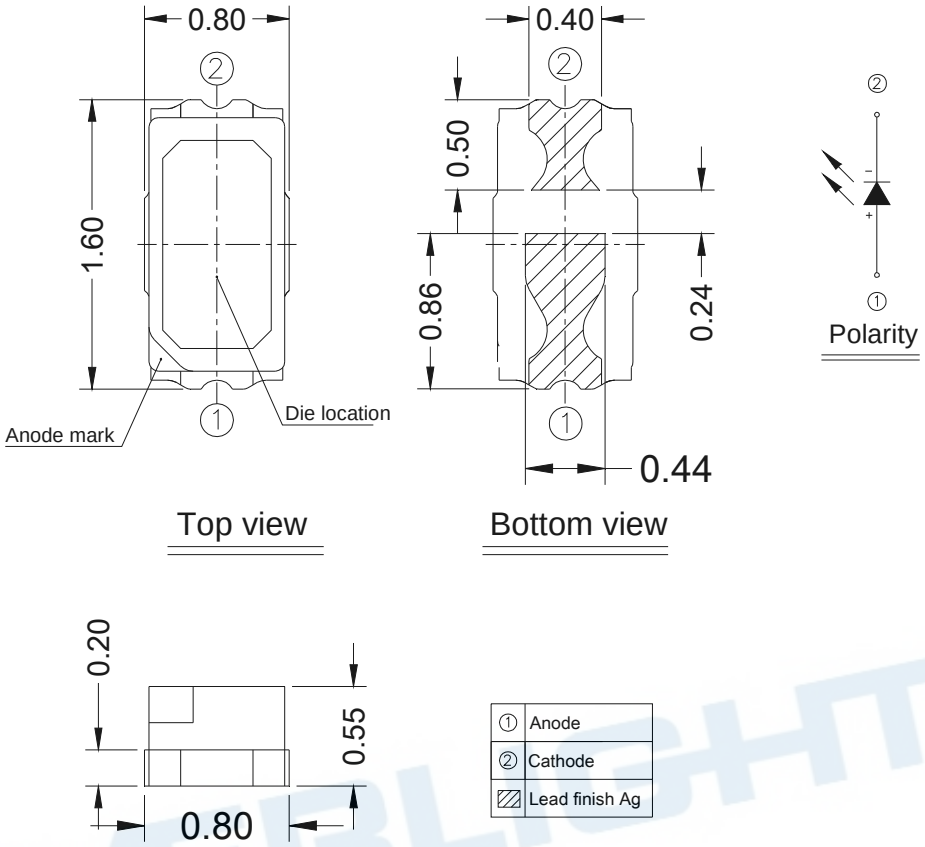

Notes:

1. Dimensions are in millimeters.
2. Tolerances unless mentioned are ± 0.1mm.

Copyright © 2019, Everlight All Rights Reserved. Release Date: Mar.07.2022 Issue No: DSE-0027238 Ver.1

Ver.:1 Release Date:03/18/2022 狀態:Approved(正式發行)

8. Recommended Soldering Pad

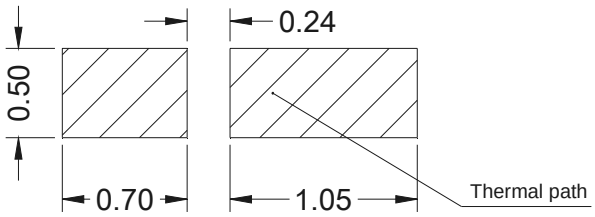

Soldering Pad

Notes:

1. Dimensions are in millimeters.
2. Tolerances unless mentioned are ± 0.1mm.

9. Reflow Soldering Profile

Soldering Condition (Reference: IPC/JEDEC J-STD-020D)

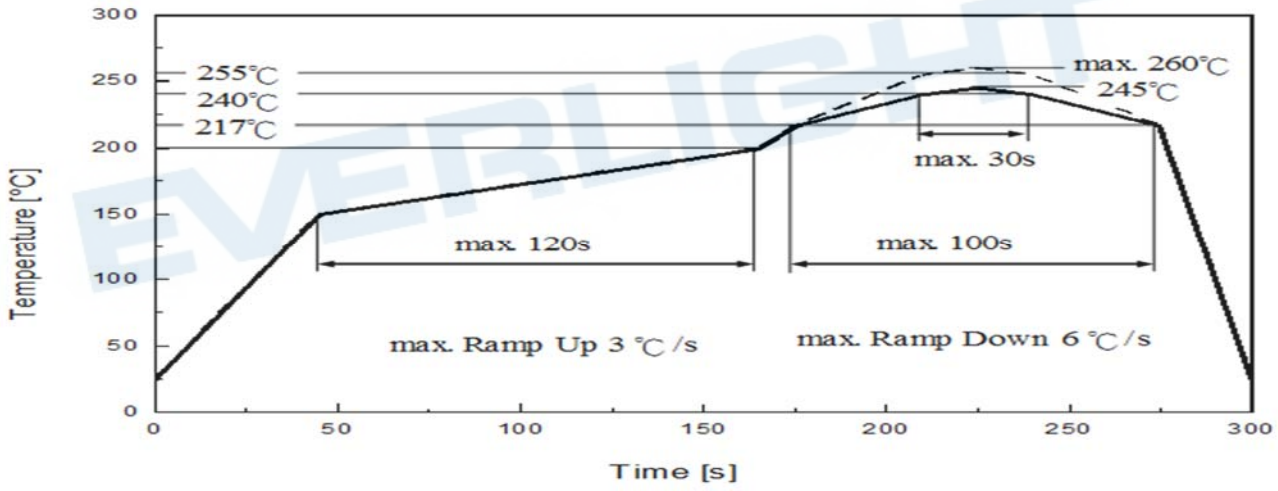

Profile Feature	Pb-Free Assembly	Unit Einheit
	Recommendation	
Ramp-up rate to preheat 25 °C to 150 °C	3	°C /sec
Time of soaking zone 150 °C to 200 °C	120	sec
Ramp-up rate to peak	3	°C /sec
Liquidus temperature	217	°C
Time above liquidus temperature	100	sec
Peak temperature (max.)	260	°C
Time within 5°C of the specified peak temperature	30	sec
Ramp-down Rate (max.)	6	°C /sec

Copyright © 2019, Everlight All Rights Reserved. Release Date: Mar.07.2022 Issue No: DSE-0027238 Ver.1
Ver.:1 Release Date:03/18/2022 狀態:Approved(正式發行)

10. Packaging Information

• Product Labeling

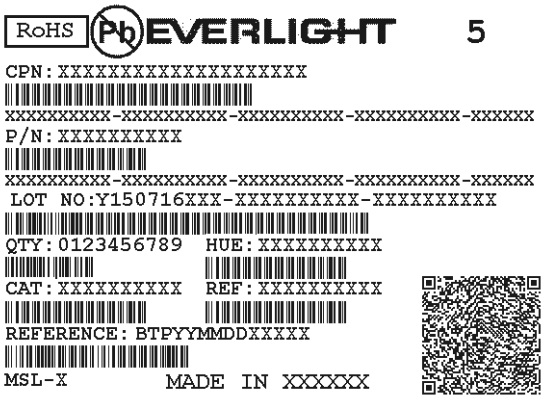

- CPN：Customer's Product Number
- P/N： Everlight Part Number
- QTY：Packing Quantity
- CAT：Luminous Flux (Brightness) Bin
- HUE：Color Bin
- REF：Forward Voltage Bin
- LOT No：Lot Number

• Packing: Loaded Quantity 2000 pcs Per Reel

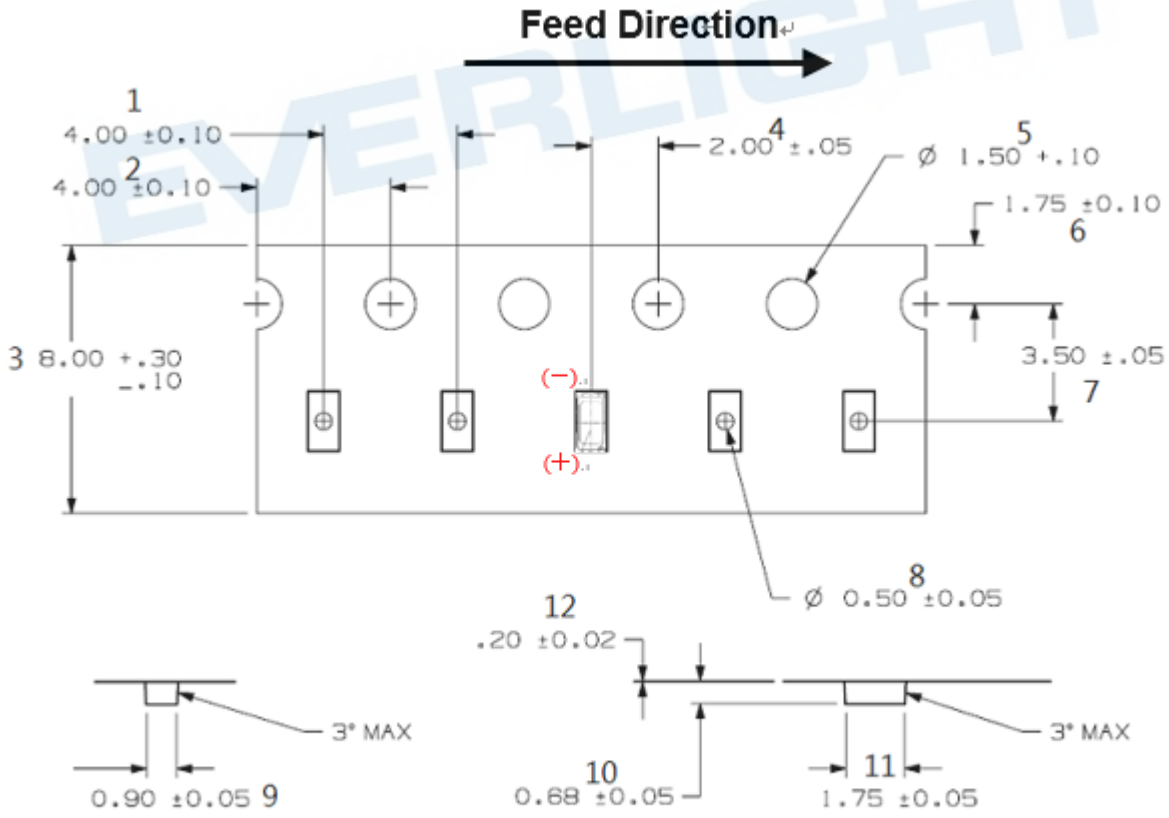

Notes:

1. Dimensions are in millimeters.

Copyright © 2019, Everlight All Rights Reserved. Release Date: Mar.07.2022 Issue No: DSE-0027238 Ver.1

Ver.:1 Release Date:03/18/2022 狀態:Approved(正式發行)

- **Reel Dimensions**

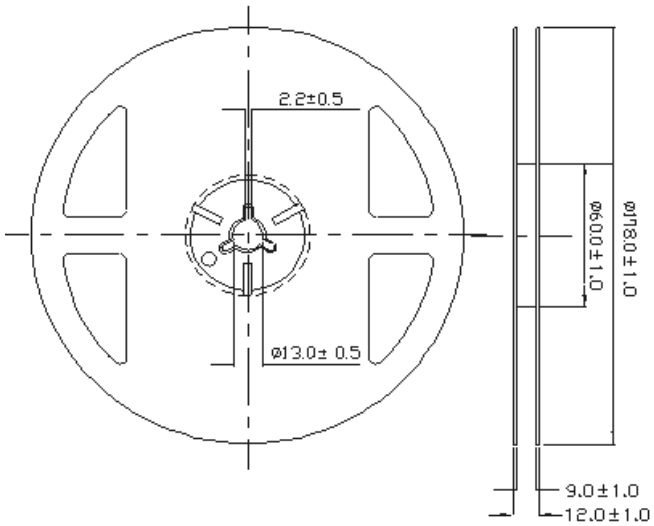

Notes:

Dimensions are in millimeters

- **Moisture Resistant Packing Process**

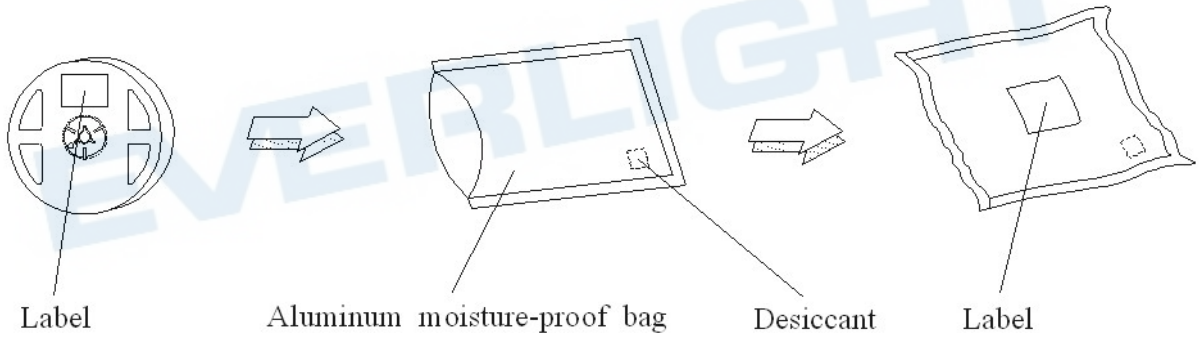

Copyright © 2019, Everlight All Rights Reserved. Release Date: Mar.07.2022 Issue No: DSE-0027238 Ver.1
Ver.:1 Release Date:03/18/2022 狀態:Approved(正式發行)

11. Precaution for Use

1. Over-current-proof
   Customer must apply resistors for protection; otherwise slight voltage shift will cause big current change (burn out will happen).

2. Assemblies
   Do not stack assemblies containing LEDs to prevent damage to the optical surface of LEDs. Forces applied to the optical surface may result in the surface being damaged.

3. Soldering Condition
   3.1 When soldering, do not put stress on the LEDs during heating.
   3.2 After soldering, do not warp the circuit board.

4. Soldering Iron
   Each terminal is to go to the tip of soldering iron temperature less than 350℃ for 3 seconds within once in less than the soldering iron capacity 25W. Leave two seconds and more intervals, and do soldering of each terminal. Be careful because the damage of the product is often started at the time of the hand solder.

5. Repairing
   Repair should not be done after the LEDs have been soldered. When repairing is unavoidable, a double-head soldering iron should be used (as below figure). It should be confirmed beforehand whether the characteristics of the LEDs will or will not be damaged by repairing.

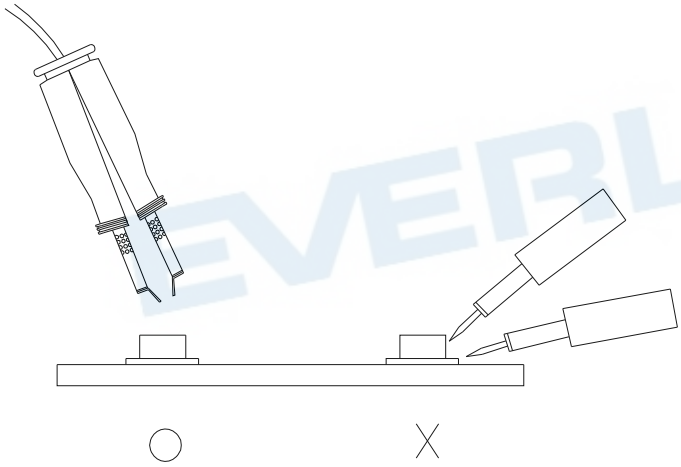

Copyright © 2019, Everlight All Rights Reserved. Release Date: Mar.07.2022 Issue No: DSE-0027238 Ver.1

Ver.:1 Release Date:03/18/2022 狀態:Approved(正式發行)

Revision History

Current version: Mar.07.2021

Issue No: DSE-0027238

Version: 1

Created by: Vicky Feng

Rev.	Subjects (major change in previous version)	Modified date
1	Standard data sheet	2022/3/7

EVERLIGHT

Copyright © 2019, Everlight All Rights Reserved. Release Date: Mar.07.2022 Issue No: DSE-0027238 Ver.1
Ver.:1 Release Date:03/18/2022 狀態:Approved(正式發行)