EVERLIGHT
AUTOMOTIVE

DATASHEET

EL Mini TOP VIEW LED
1608-PA0100M-AM



Features

- Package：PLCC 2 package
- Color：Phosphor Converted Amber
- Typ. Luminance Intensity：710 mcd @ 10mA
- Viewing angle：120°
- ESD：2KV
- MSL：3
- Qualified AEC-Q102
- Corrosion Robustness Class B1
- The product itself will remain within RoHS compliant version.
- Compliance with EU REACH.
- Compliance Halogen Free .(Br <900 ppm ,Cl <900 ppm , Br+Cl < 1500 ppm)

Application

- Automotive Interior lighting.

Contents

1. Characteristics 3
2. Absolute Maximum Ratings 4
3. Characteristics Graph 5
4. Binning Information 10
5. Part Number 12
6. Ordering Information 14
7. Mechanical Dimension 15
8. Recommended Soldering Pad 16
9. Reflow Soldering Profile 16
10. Packaging Information 17
11. Precaution for Use 19
12. Sulfur Test Criteria 20

Copyright © 2016, Everlight All Rights Reserved. Release Date:17.Jul.2025 Rev.1

1. Characteristics

Parameter		Symbol	Min.	Typ.	Max.	Unit	Condition
Forward Current		I_F	2	10	20	mA	---
Luminous Intensity		I_V	610	710	970	mcd	I_F=10mA
Forward Voltage		V_F	2.5	2.85	3.5	V	I_F=10mA
Viewing Angle		φ	---	120	---	deg	I_F=10mA
Color		CIE x	---	0.56	---	---	I_F=10mA
Color		CIE y	---	0.42	---	---	I_F=10mA
Thermal Resistance (Junction to Solder)	Real	$R_{th\ JS\ real}$	---	160	---	K/W	I_F=10mA
	Electrical	$R_{th\ JS\ el}$	---	140	---	K/W	I_F=10mA

Notes:

1. Luminous Flux measurement tolerance: ±8%.
2. The data of Luminous Flux measured at thermal pad=25°C.
3. Forward voltage measurement tolerance: ±0.05V.
4. Tolerance of Chromaticity Coordinates x,y：±0.005.

Copyright © 2016, Everlight All Rights Reserved. Release Date:17.Jul.2025 Rev.1

2. Absolute Maximum Ratings

Parameter	Symbol	Ratings	Unit
Power Dissipation	P_d	70	mW
Forward Current	I_F	20	mA
Surge Current (t<=10 μs; D=0.005; T_s=25 ℃)	I_{FM}	50	mA
Reverse Voltage	V_R	Not designed for reverse operation	V
Junction Temperature	T_J	125	°C
Operating Temperature	T_{opr}	-40 ~ +110	°C
Storage Temperature	T_{stg}	-40 ~ +110	°C
ESD Sensitivity (R=1.5kΩ, C= 100pF)	ESD_{HBM}	2	kV
Soldering Temperature	Reflow	260°C for 30sec	°C

Copyright © 2016, Everlight All Rights Reserved. Release Date:17.Jul.2025 Rev.1

3. Characteristics Graph

Wavelength Characteristics Relative Spectral Distribution

@ Ts = 25°C, I_F=10mA

$$\Phi_V / \Phi_V\,(Max.) = f(\lambda)$$

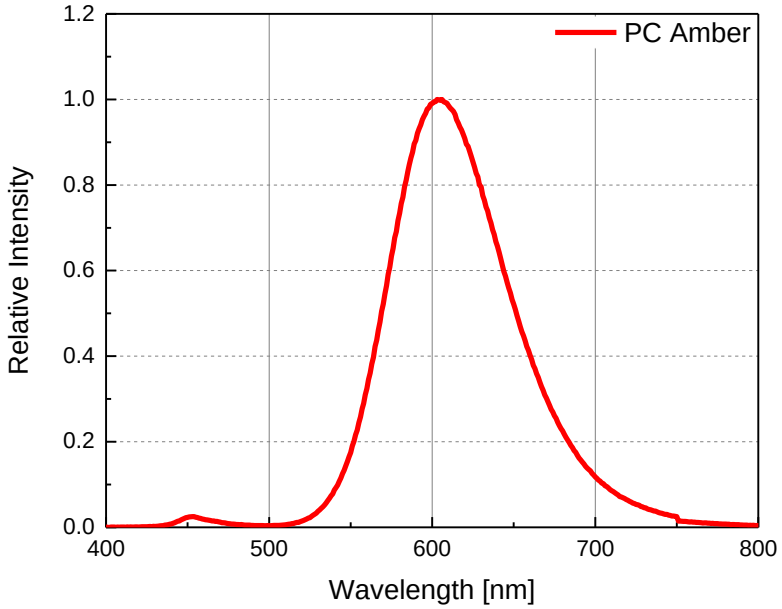

Typical Diagram Characteristics of Radiation

$$\Phi_V / \Phi_V\,(0^\circ) = f(\varphi)$$

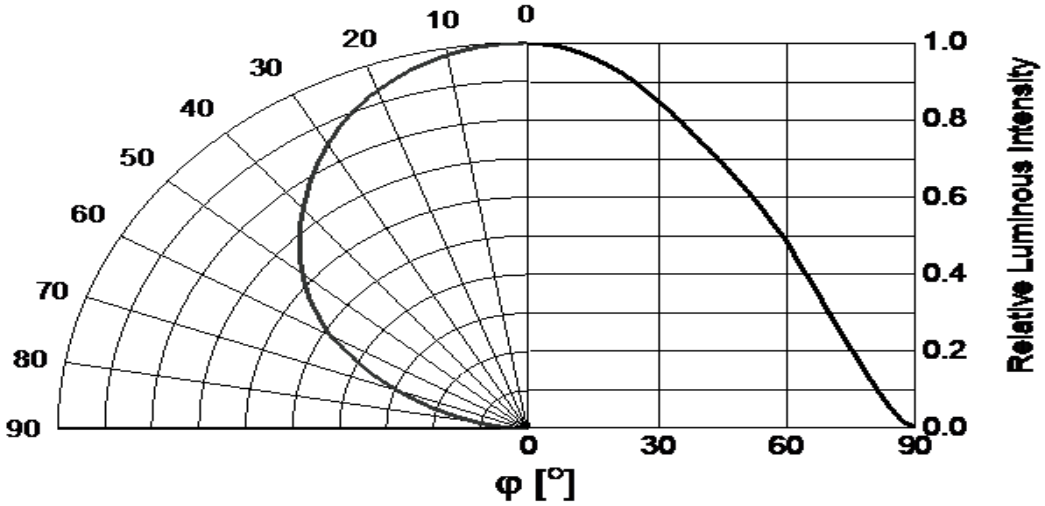

Notes:

1. φ is the off axis angle from lamp centerline where the luminous intensity is 1/2 of the peak value.
2. View angle tolerance is ± 5°.

Copyright © 2016, Everlight All Rights Reserved. Release Date:17.Jul.2025 Rev.1

Forward Current vs. Forward Voltage
@ Ts = 25°C

$$I_F = f(V_F)$$

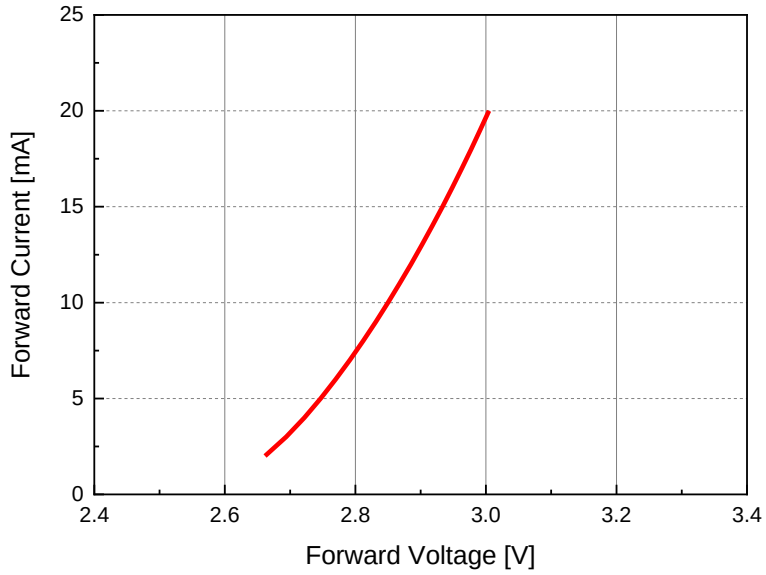

Relative Luminous Intensity vs. Forward Current
@ Ts = 25°C

$$\Phi_V / \Phi_V(10mA) = f(I_F)$$

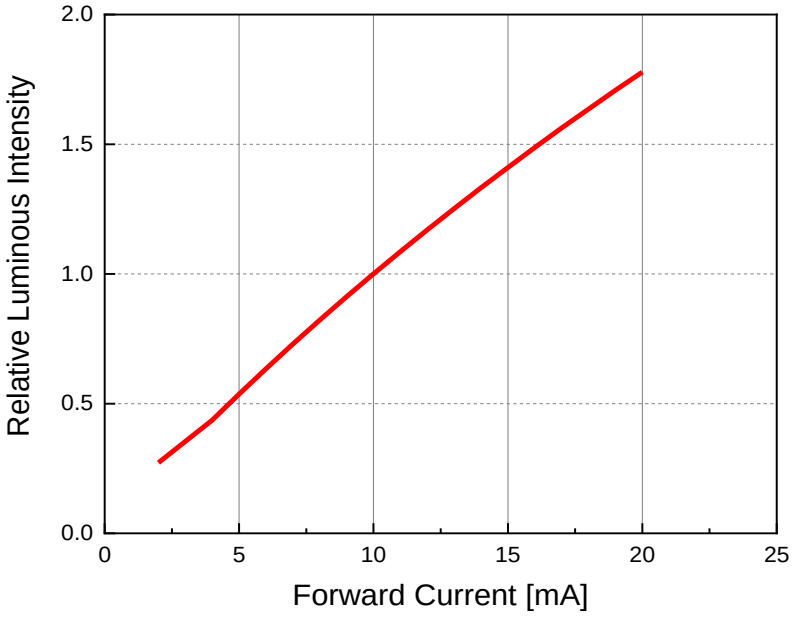

Copyright © 2016, Everlight All Rights Reserved. Release Date:17.Jul.2025 Rev.1

Chromaticity Coordinates Shift vs. Forward Current
@ Ts = 25°C

$$\triangle CIE\ x, \triangle CIE\ y = f(I_F)$$

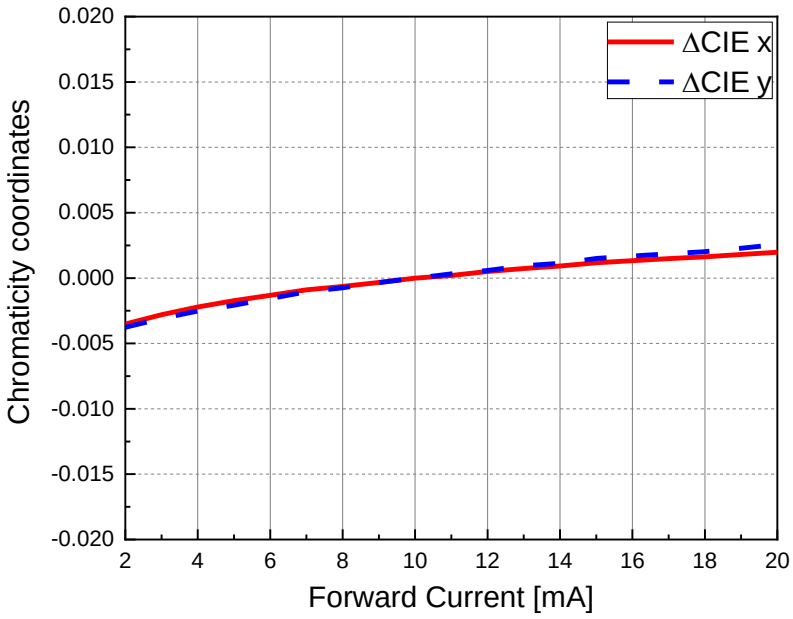

Relative Forward Voltage vs. Junction Temperature
@ I_F=10mA

$$\Delta V_F = V_F - V_F(25^\circ C) = f(T_j)$$

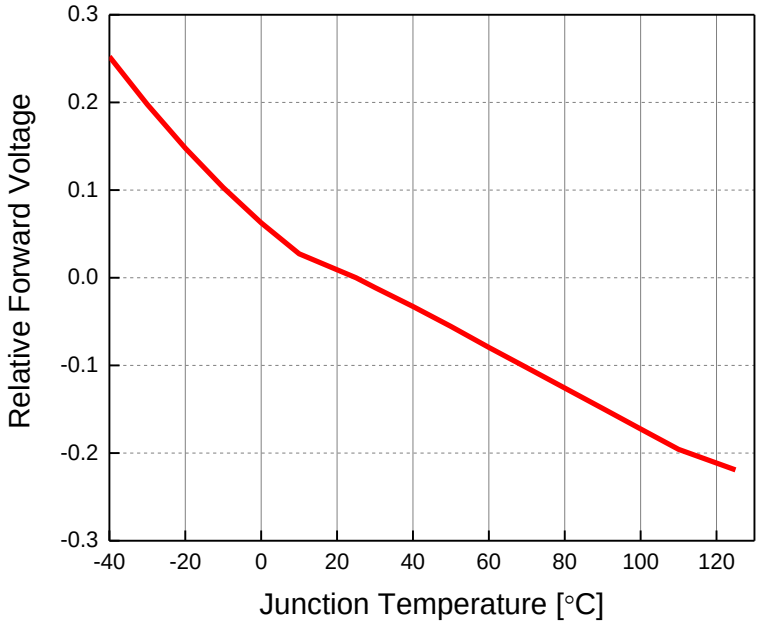

Copyright © 2016, Everlight All Rights Reserved. Release Date:17.Jul.2025 Rev.1

Relative Luminous Intensity vs. Junction Temperature
@ I_F=10mA

$$\Phi_V / \Phi_V(25^\circ C) = f(T_j)$$

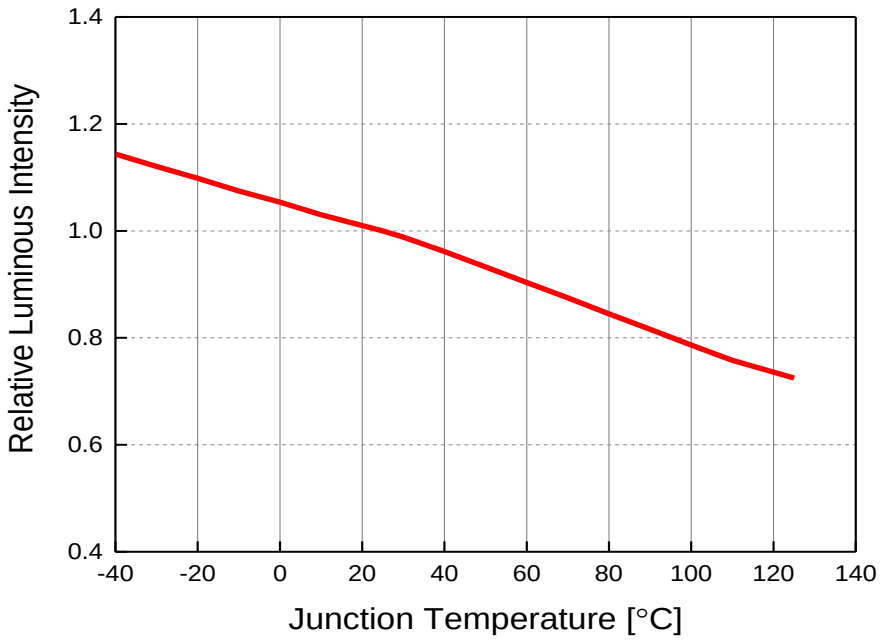

Chromaticity Coordinates Shift vs. Junction Temperature
@ I_F=10mA

$$\triangle CIE\ x, \triangle CIE\ y = f(T_j)$$

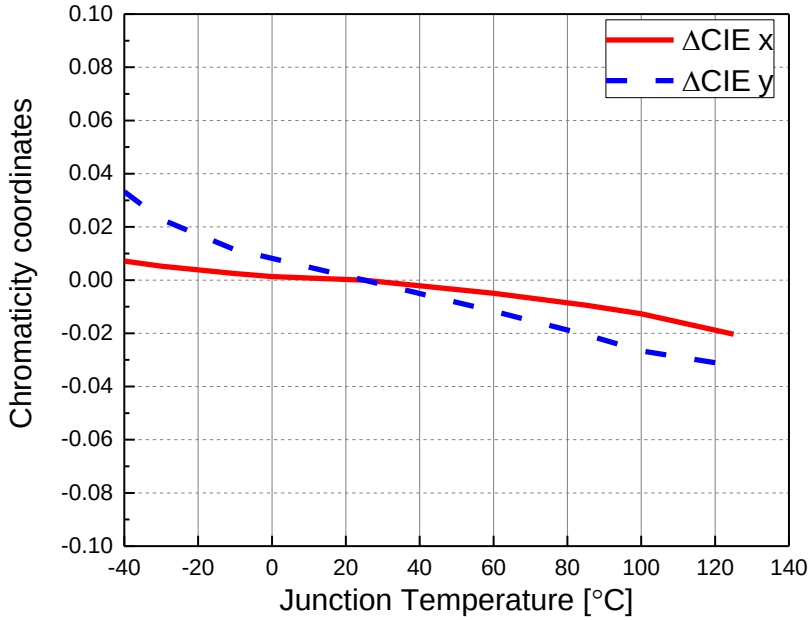

Copyright © 2016, Everlight All Rights Reserved. Release Date:17.Jul.2025 Rev.1

Forward Current Derating Curve

$$I_F = f(T_S)$$

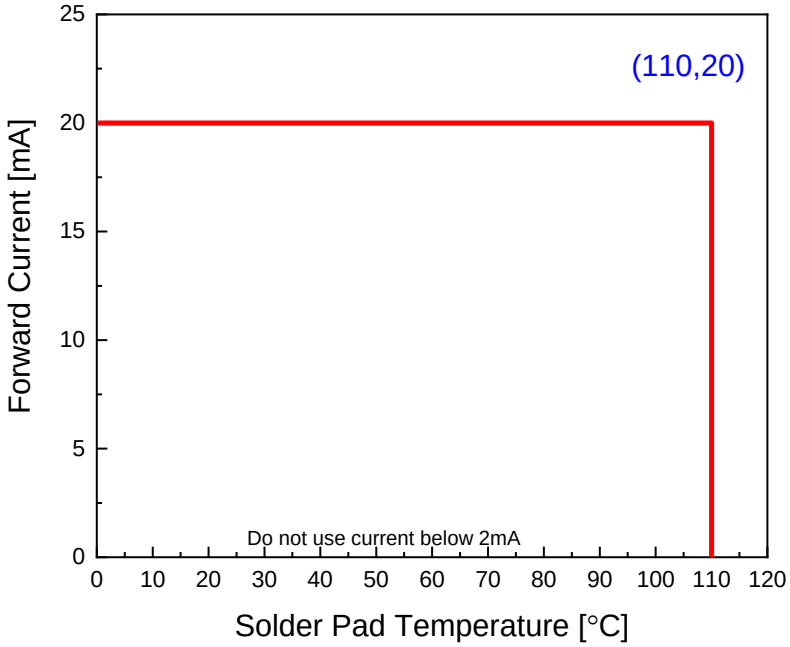

Permissible Pulse Handling Capability

D=Duty cycle , T_s = 25℃

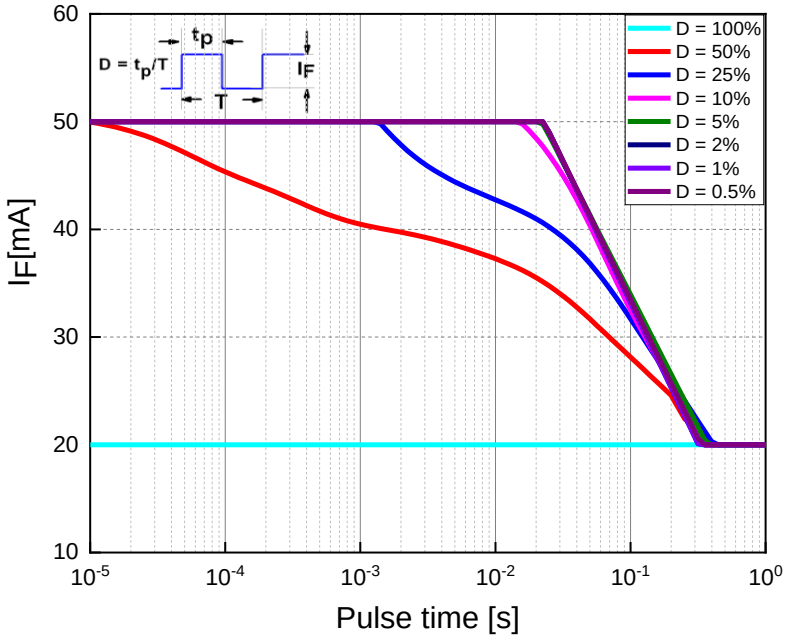

Copyright © 2016, Everlight All Rights Reserved. Release Date:17.Jul.2025 Rev.1

4. Binning Information

Luminous Intensity Bins

Group	Bin	Minimum Luminous Intensity (mcd)	Maximum Luminous Intensity (mcd)
Q	X	71	82
	Y	82	97
	Z	97	112
R	X	112	130
	Y	130	150
	Z	150	180
S	X	180	210
	Y	210	240
	Z	240	280
T	X	280	330
	Y	330	390
	Z	390	450
U	X	450	520
	Y	520	610
	Z	610	710
V	X	710	820
	Y	820	970
	Z	970	1120
A	X	1120	1300
	Y	1300	1500
	Z	1500	1800
B	X	1800	2100
	Y	2100	2400
	Z	2400	2800

Notes:

1. Luminous flux measurement tolerance: ±8%.
2. Highlighted Black Box is possible output bins.

Copyright © 2016, Everlight All Rights Reserved. Release Date:17.Jul.2025 Rev.1

Standard Phosphor Converted Amber Color Bin Structure

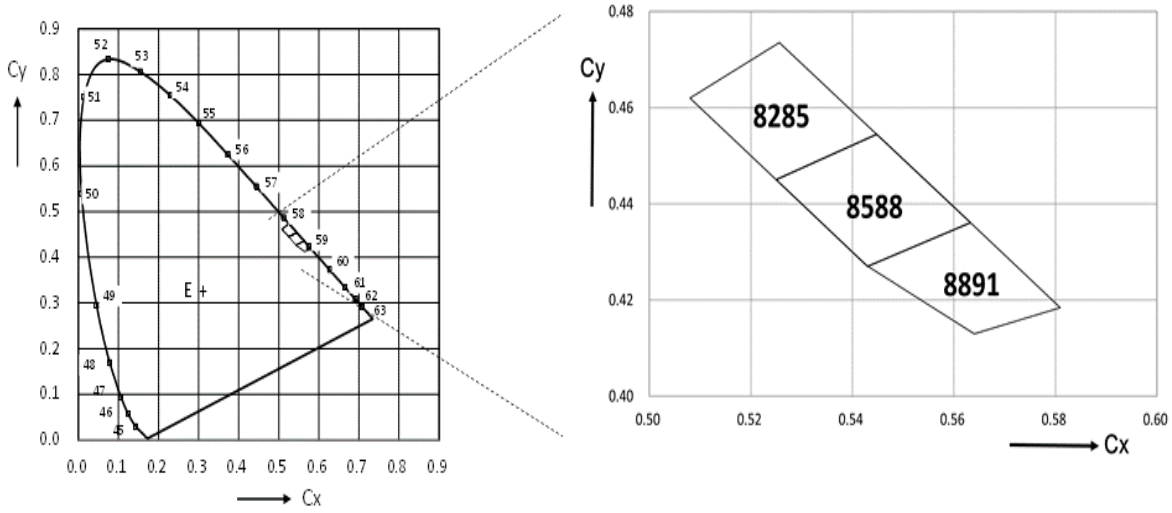

Phosphor Converted Amber Color Bin Coordinates

Bin Code	CIE_x	CIE_y	Bin Code	CIE_x	CIE_y
8285	0.5256	0.4735	8588	0.5448	0.4544
	0.5448	0.4544		0.5633	0.4361
	0.5250	0.4450		0.5430	0.4270
	0.5080	0.4620		0.5250	0.4450
8891	0.5640	0.4130			
	0.5430	0.4270			
	0.5633	0.4361			
	0.5810	0.4185			

Notes:

1. Tolerance of Chromaticity Coordinates x,y：±0.005.

Copyright © 2016, Everlight All Rights Reserved. Release Date:17.Jul.2025 Rev.1

Forward Voltage Bins

Bin code	Min Forward Voltage [V]	Max Forward Voltage [V]
1012	1.00	1.25
1215	1.25	1.50
1517	1.50	1.75
1720	1.75	2.00
2022	2.00	2.25
2225	2.25	2.50
2527	2.50	2.75
2730	2.75	3.00
3032	3.00	3.25
3235	3.25	3.50
3537	3.50	3.75
3740	3.75	4.00
4042	4.00	4.25
4245	4.25	4.50
4547	4.50	4.75
4750	4.75	5.00
5052	5.00	5.25
5255	5.25	5.50
5557	5.50	5.75
5760	5.75	6.00
6062	6.00	6.25
6265	6.25	6.50
6567	6.50	6.75
6770	6.75	7.00

Notes:

1. Forward voltage measurement tolerance: ±0.05V.
2. Forward voltage bins are defined at I_F = 10mA operation.
3. Highlighted Black Box is possible output bins.

Copyright © 2016, Everlight All Rights Reserved. Release Date:17.Jul.2025 Rev.1

5. Part Number

1608-PA0100M-AM

Part number is designated with below details.

1608 = Product family name.

PA = Color [1]

010 = Test current [mA]

0M = Internal Code

AM = Automotive application

Note

[1] Color：

Symbol	Description
B	Cool White
C	Cool White
N	Neutral White
W	Warm White
PA	Phosphor Converted Amber
PR	Phosphor Converted Red
UB	Blue
IB	Ice Blue
SB	Sky Blue
UP	Purple
UG	Green
UY	Yellow
UYG	Brilliant Yellow Green
UPG	Pale Green
UA	Amber
UR	Red
SR	Super Red
RGB	RGB-Color
PYG	Phosphor Converted Yellow Green

Copyright © 2016, Everlight All Rights Reserved. Release Date:17.Jul.2025 Rev.1

6. Ordering Information

1608-PA0100M-ABCDEFGHJKLM-NO-AM

Part Number of the 1608	Order Code
1608-PA0100M-AM	1608-PA0100M- ABCDEFGHJKLM-NO-AM

Order code contains information with below details：

ABCD = min/max wavelength or CCT

EFGH = min./max. luminous flux in [lm] or luminous intensity in [mcd]

JKLM = min./max. forward voltage

NO = internal code

AM = Automotive Application

Copyright © 2016, Everlight All Rights Reserved. Release Date:17.Jul.2025 Rev.1

7. Mechanical Dimension

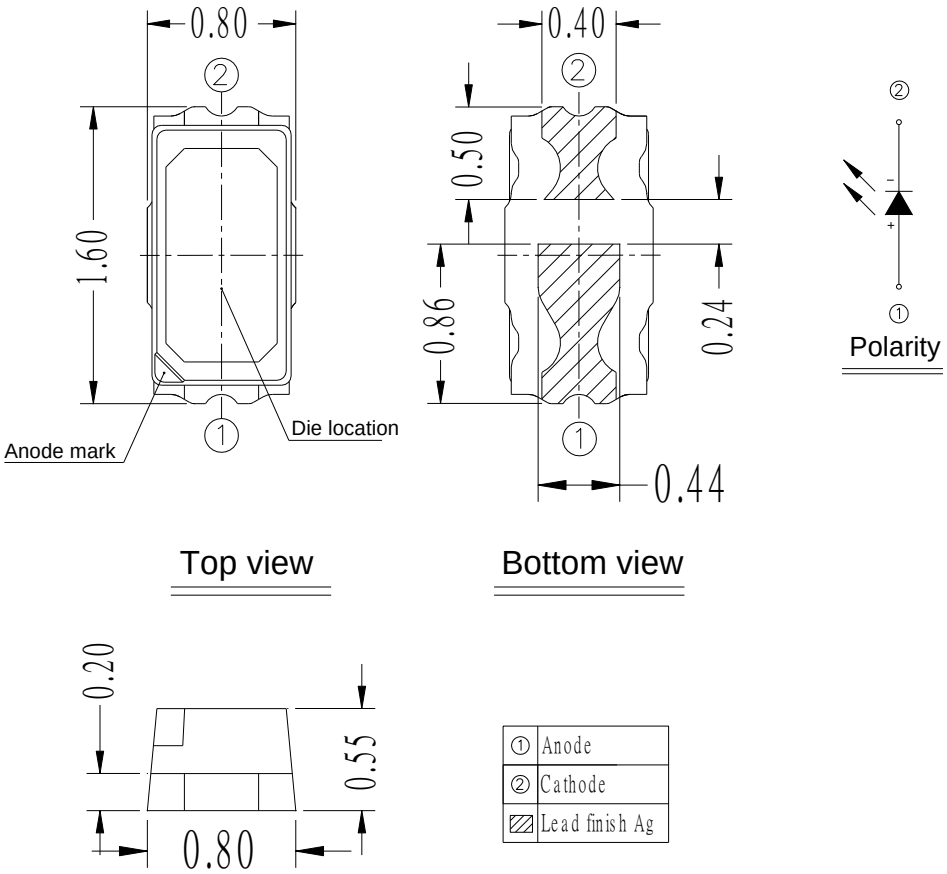

Notes:

1. Dimensions are in millimeters.
2. Tolerances unless mentioned are ± 0.1mm.

Copyright © 2016, Everlight All Rights Reserved. Release Date:17.Jul.2025 Rev.1

8. Recommended Soldering Pad

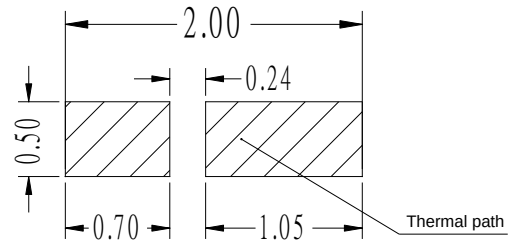

Soldering Pad

9. Reflow Soldering Profile

Soldering Condition (Reference: IPC/JEDEC J-STD-020D)

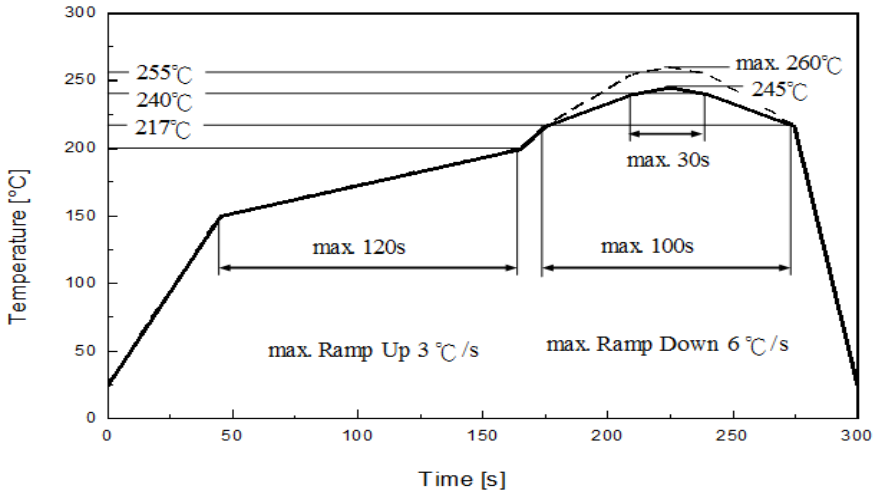

Profile Feature	Pb-Free Assembly Recommendation	Unit
Ramp-up rate to preheat 25 °C to 150 °C	3	°C /sec
Time of soaking zone 150 °C to 200 °C	120	sec
Ramp-up rate to peak	3	°C /sec
Liquidus temperature	217	°C
Time above liquidus temperature	100	sec
Peak temperature (max.)	260	°C
Time within 5°C of the specified peak temperature	30	sec
Ramp-down Rate (max.)	6	°C /sec

Copyright © 2016, Everlight All Rights Reserved. Release Date:17.Jul.2025 Rev.1

10. Packaging Information

● Product Labeling

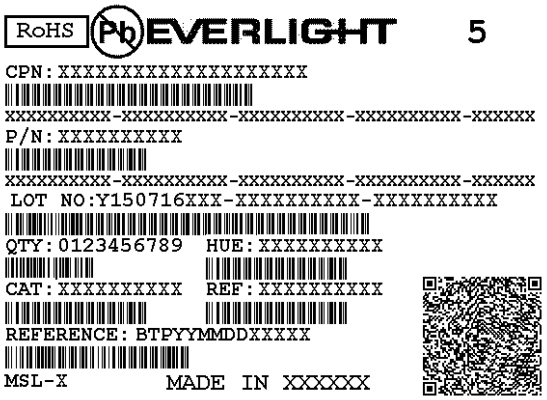

- CPN：Customer's Product Number
- P/N：Everlight Part Number
- QTY：Packing Quantity
- CAT：Luminous Flux (Brightness) Bin
- HUE：Color Bin
- REF：Forward Voltage Bin
- LOT No：Lot Number

● Packing: Loaded Quantity 2000 pcs Per Reel

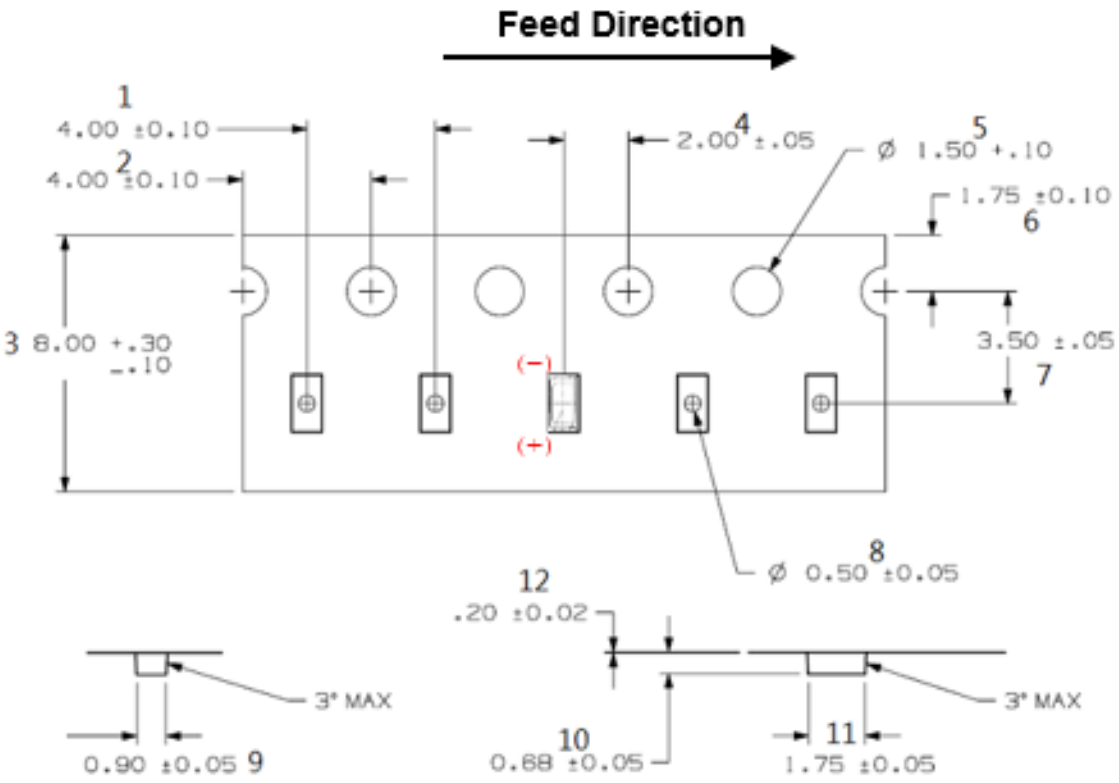

Notes:

1. Dimensions are in millimeters.

Copyright © 2016, Everlight All Rights Reserved. Release Date:17.Jul.2025 Rev.1

● Reel Dimensions

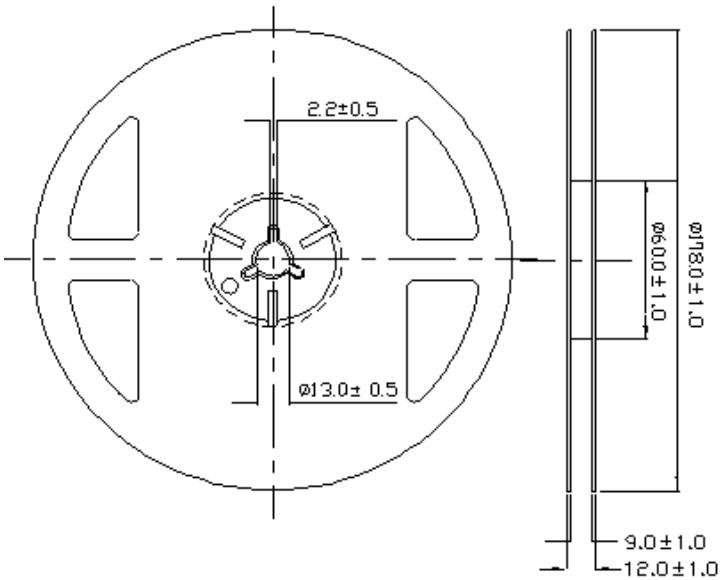

Notes:

1. Dimensions are in millimeters.
2. Tolerances unless mentioned are ±0.2mm.

● Moisture Resistant Packing Process

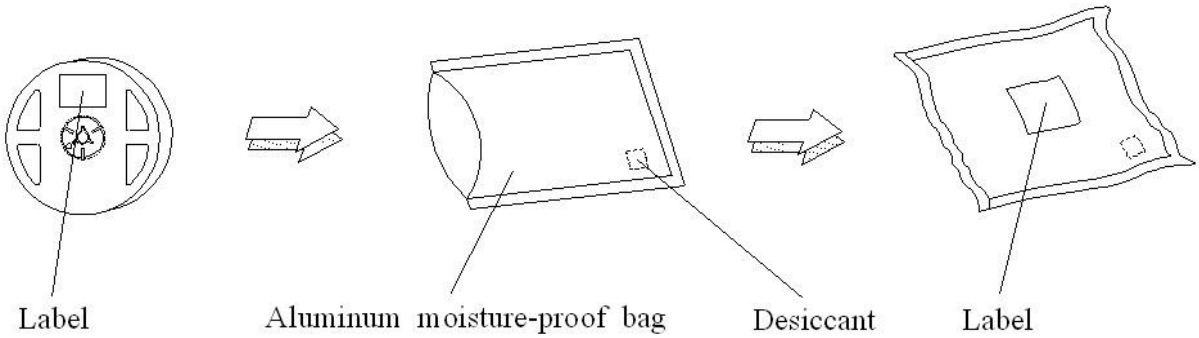

Notes:

1. Dimensions are in millimeters.
2. Tolerances unless mentioned are ±0.2mm.

Copyright © 2016, Everlight All Rights Reserved. Release Date:17.Jul.2025 Rev.1

11. Precaution for Use

1. Over-current-proof
   Customer must apply resistors for protection; otherwise slight voltage shift will cause big current change (burn out will happen).

2. Assemblies
   Do not stack assemblies containing LEDs to prevent damage to the optical surface of LEDs. Forces applied to the optical surface may result in the surface being damaged.

3. Soldering Condition
   3.1 When soldering, do not put stress on the LEDs during heating.
   3.2 After soldering, do not warp the circuit board.

4. Soldering Iron
   Each terminal is to go to the tip of soldering iron temperature less than 350℃ for 3 seconds within once in less than the soldering iron capacity 25W. Leave two seconds and more intervals, and do soldering of each terminal. Be careful because the damage of the product is often started at the time of the hand solder.

5. Repairing
   Repair should not be done after the LEDs have been soldered. When repairing is unavoidable, a double-head soldering iron should be used (as below figure). It should be confirmed beforehand whether the characteristics of the LEDs will or will not be damaged by repairing.

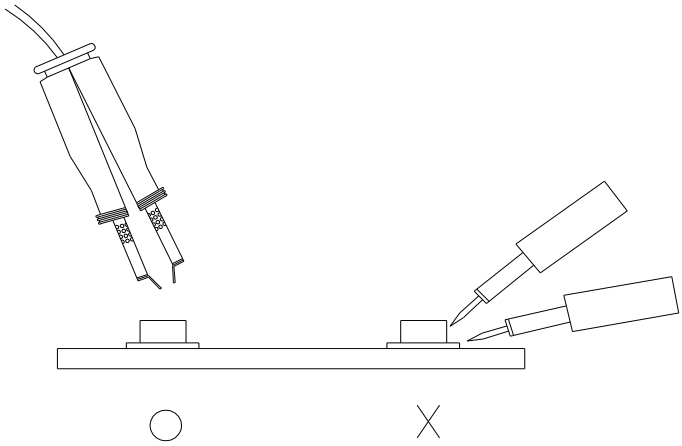

Copyright © 2016, Everlight All Rights Reserved. Release Date:17.Jul.2025 Rev.1

12. Sulfur Test Criteria

Products	Failure Criteria
Exterior Lighting products	Luminous Flux +/-20%, forward voltage +/-10%, color coordinates x,y +/-0.01, color wavelength +/- 2 nm Visual defect issue following Everlight's inspection criteria
Interior lighting products	Luminous Flux +/-30% or +/-50% for some application, forward voltage +/-10%, color coordinates x,y +/-0.02, color wavelength +/- 2 nm Visual defect issue following Everlight's inspection criteria

H2S test	Grade A0	Grade A1	Grade B0	Grade B1
Class A	Pass ΔIV, ΔColor, ΔVF criteria No Corrosion	Pass ΔIV, ΔColor, ΔVF criteria Corrosion without the impact on reliability and lifetime		
Class B			Pass ΔIV, ΔColor, ΔVF criteria No Corrosion	Pass ΔIV, ΔColor, ΔVF criteria Corrosion without the impact on reliability and lifetime

Condition for H2S and FMG	Description	
	H2S	FMG
Class A	15 ppm with duration 336 h at 40 °C and 90% RH	Duration 500 h at 25 °C and 75% RH. H2S concentration: 10ppb SO2 concentration: 200ppb NO2 concentration: 200ppb Cl2 concentration: 10ppb
Class B	10 ppm with duration 500 h at 25 °C and 75% RH	

Grade for H2S Test	Description
0	No Corrosion
1	Corrosion without the impact on reliability and lifetime

Copyright © 2016, Everlight All Rights Reserved. Release Date:17.Jul.2025 Rev.1