DATASHEET

EVERLIGHT AUTOMOTIVE

EL 2820

2820-SR3501H-AM SERIES

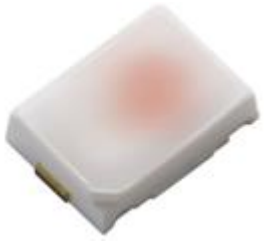

Features

- Package：SMD package
- Color：Super Red
- Typ. Luminous Flux：45 lm @ 350mA
- Viewing angle：120˚
- ESD：2KV
- MSL：2
- Qualifications：According to AEC-Q102 Rev A
- Sulfur Test Criteria Class：A1
- Compliance with RoHS and REACH
- Compliance Halogen Free (Br <900 ppm, Cl <900 ppm, Br + Cl < 1500 ppm)

Applications

- Automotive lighting.

Contents

1. Characteristics 2
2. Absolute Maximum Ratings 3
3. Mechanical Dimension 4
4. Recommended Soldering Pad 5
5. Binning Information 6
6. Characteristics Graph 7
7. Part Number 12
8. Ordering Information 13
9. Reflow Soldering Profile 14
10. Packaging Information 15
11. Precaution for Use 17
12. Sulfur Test Criteria 18

Copyright©2016,Everlight All Rights Reserved. Release Date:19.Dec.2024 Issue No:DSE-0033732 Rev.1

1. Characteristics

Parameter		Symbol	Min.	Typ.	Max.	Unit	Condition
Forward Current		I_F	50	350	500	mA	---
Luminous Flux		I_V	39	45	60	lm	I_F=350mA
Forward Voltage		V_F	2.00	2.45	2.75	V	I_F=350mA
Viewing Angle		φ	---	120	---	deg	I_F=350mA
Dominant Wavelength		λ_d	627	632	639	nm	I_F=350mA
Thermal Resistance (Junction to Solder)	Real	$R_{th\ JS\ real}$	---	12.8	16.2	K/W	I_F=350mA
	Electrical	$R_{th\ JS\ el}$	---	10	13		

Notes：

1.Luminous flux measurement tolerance: ±8%.

2.The data of luminous flux measured at thermal pad=25°C.

3.Forward voltage measurement tolerance: ±0.05V.

4.Tolerance of Dominant Wavelength：±1nm.

Copyright©2016,Everlight All Rights Reserved.

2. Absolute Maximum Ratings

Parameter	Symbol	Ratings	Unit
Power Dissipation	P_d	1375	mW
Forward Current	I_F	500	mA
Surge Current (t<=10 μs; D=0.005; T_s=25 ℃)	I_{FM}	1500	mA
Reverse Voltage	V_R	Not designed for reverse operation	V
Junction Temperature	T_J	150	°C
Operating Temperature	T_{opr}	-40 ~ +125	°C
Storage Temperature	T_{stg}	-40 ~ +125	°C
ESD Sensitivity (R=1.5kΩ, C= 100pF)	ESD_{HBM}	2	kV
Soldering Temperature	Reflow	260°C for 30sec	°C

Copyright©2016,Everlight All Rights Reserved. Release Date:19.Dec.2024 Issue No:DSE-0033732 Rev.1

3. Mechanical Dimension

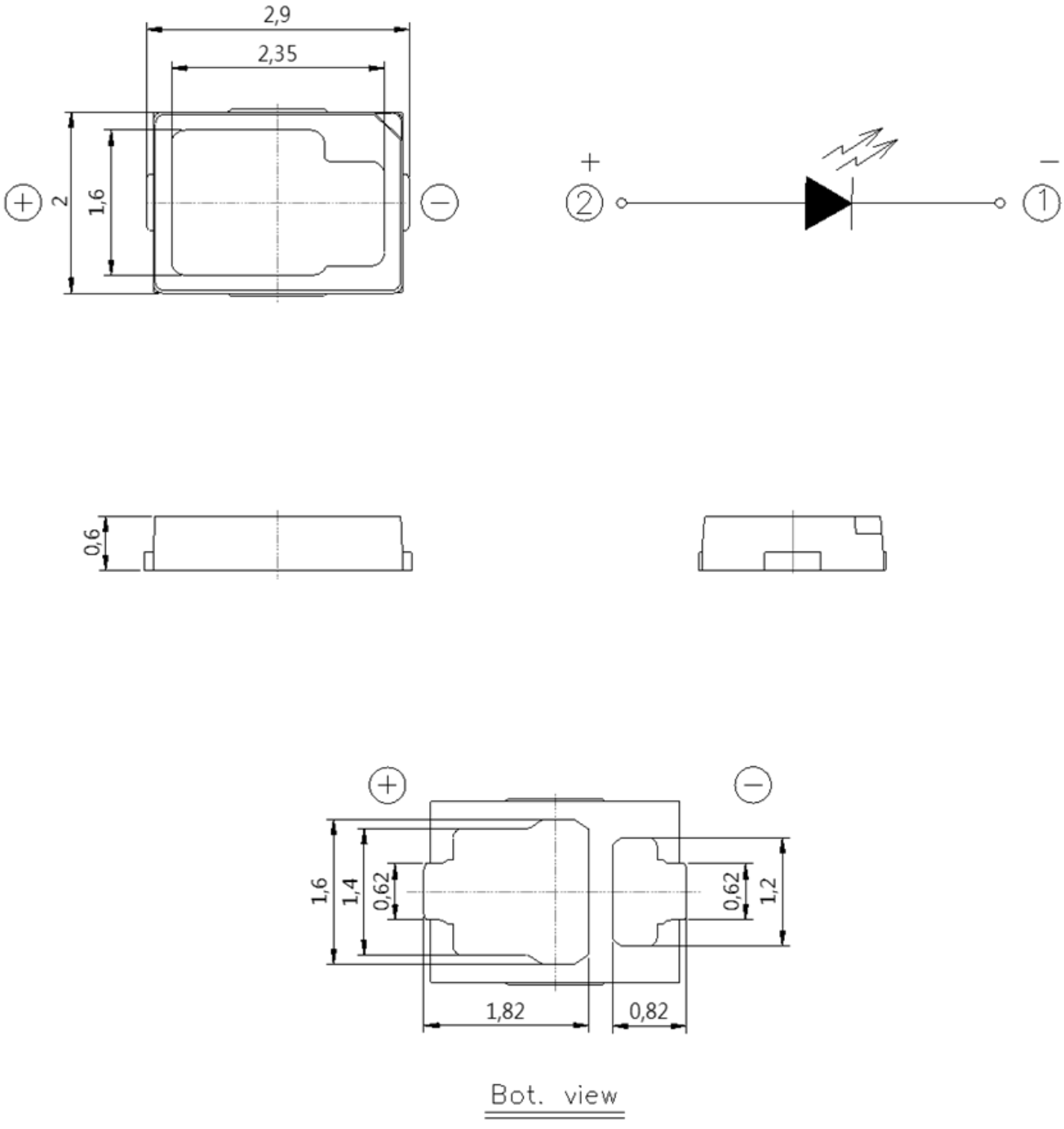

Notes：

1.Dimensions are in millimeters.

2.Tolerances unless mentioned are ± 0.1mm.

Copyright©2016,Everlight All Rights Reserved. Release Date:19.Dec.2024 Issue No:DSE-0033732 Rev.1

4. Recommended Soldering Pad

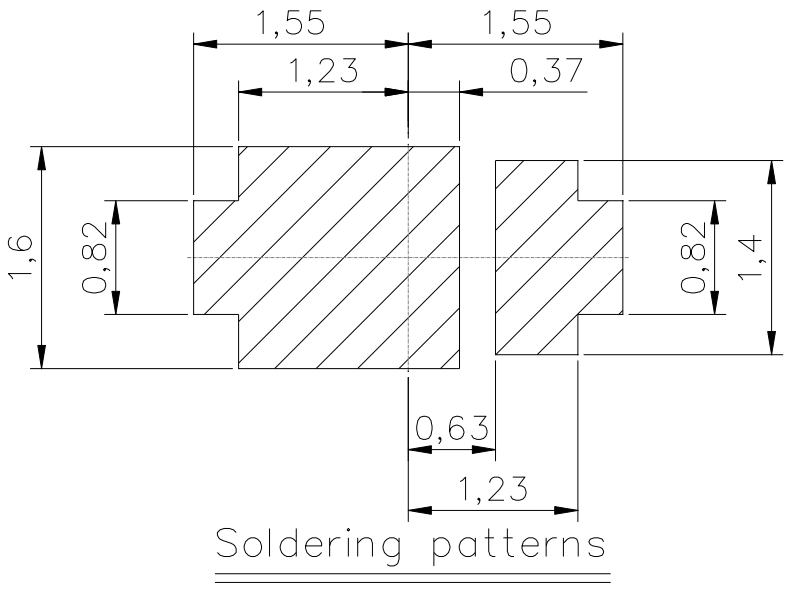

Suggested pad dimension is just reference only.
Please modify the pad dimension based on individual need.

Notes：

1.Dimensions are in millimeters.

2.Tolerances unless mentioned are ± 0.1mm.

Copyright©2016,Everlight All Rights Reserved. Release Date:19.Dec.2024 Issue No:DSE-0033732 Rev.1

5. Binning Information

Luminous Flux Bins

Bin code	Min. Luminous Flux (lm)	Max. Luminous Flux (lm)
F3	39	45
F4	45	52
F5	52	60

Forward Voltage Bins

Bin code	Min Forward Voltage [V]	Max Forward Voltage [V]
2022	2.00	2.25
2225	2.25	2.50
2527	2.50	2.75

Dominant Wavelength Bins

Group Bin	Minimum Dominant Wavelength [nm]	Maximum Dominant Wavelength [nm]
2730	627	630
3033	630	633
3336	633	636
3639	636	639

Notes：

1.Luminous flux measurement tolerance: ±8%.

2.Forward voltage measurement tolerance: ±0.05V.

3. Dominant wavelength measurement tolerance: ±1nm.

4.Current pulse time: 25ms.

Copyright©2016,Everlight All Rights Reserved. Release Date:19.Dec.2024 Issue No:DSE-0033732 Rev.1

6. Characteristics Graph

Wavelength Characteristics Relative Spectral Distribution @ Ts = 25°C, I_F=350mA

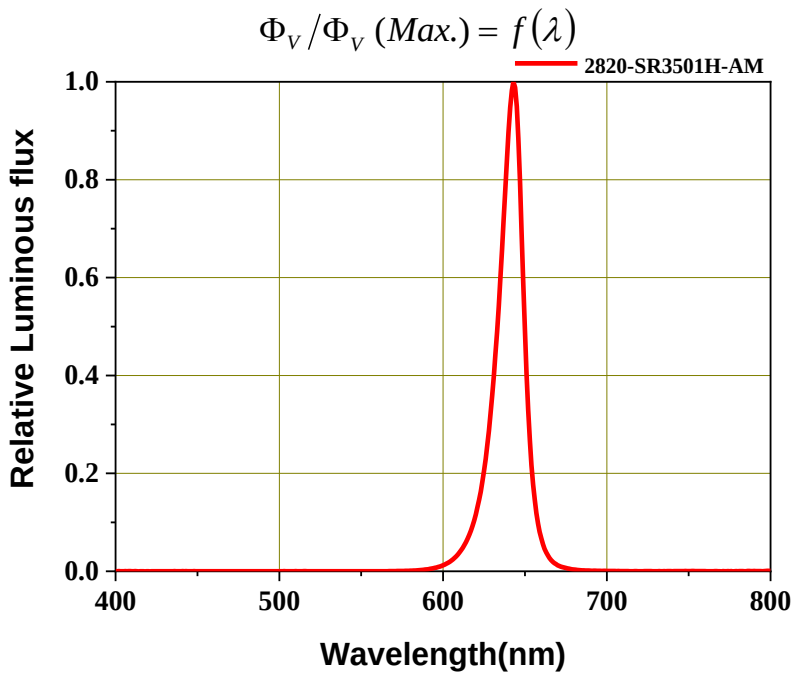

Typical Diagram Characteristics of Radiation

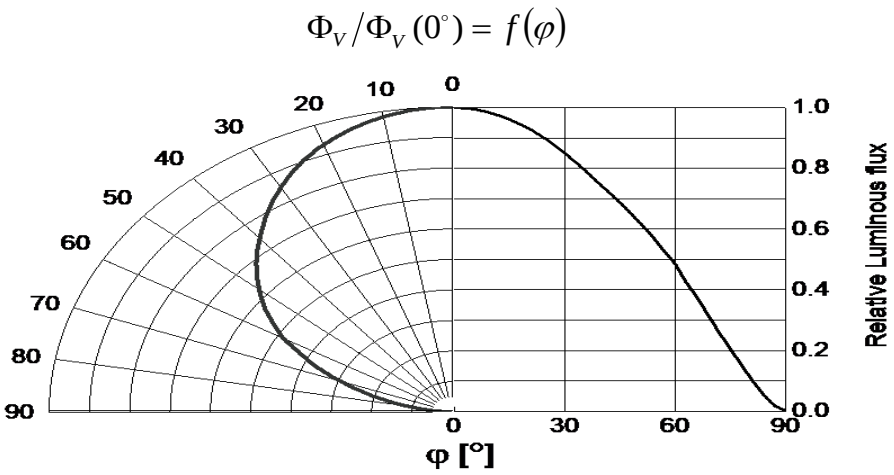

Notes：

1.φ is the off axis angle from lamp centerline where the luminous intensity is 1/2 of the peak value.

2.View angle tolerance is ± 5°.

Copyright©2016,Everlight All Rights Reserved. Release Date:19.Dec.2024 Issue No:DSE-0033732 Rev.1

Forward Current vs. Forward Voltage
@ Ts = 25°C

$$I_F = f(V_F)$$

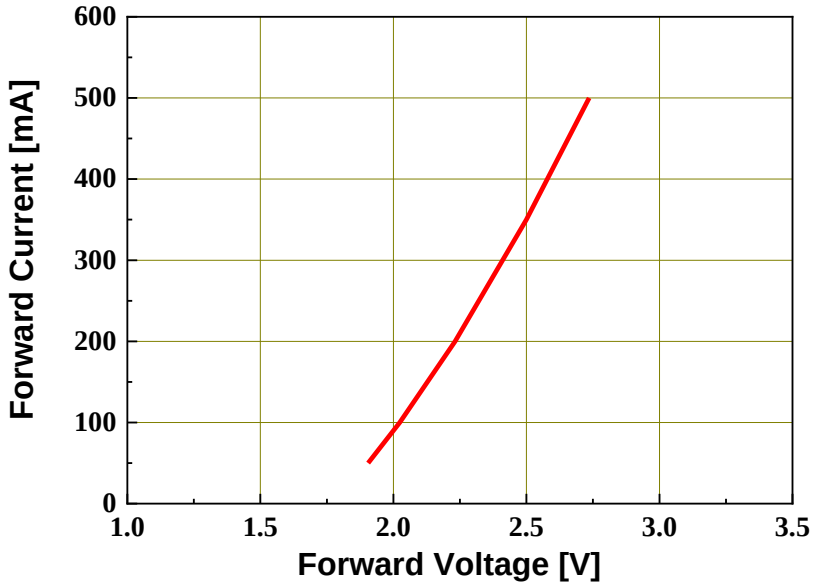

Relative Luminous Flux vs. Forward Current
@ Ts = 25°C

$$\Phi_V / \Phi_V\,(350mA) = f(I_F)$$

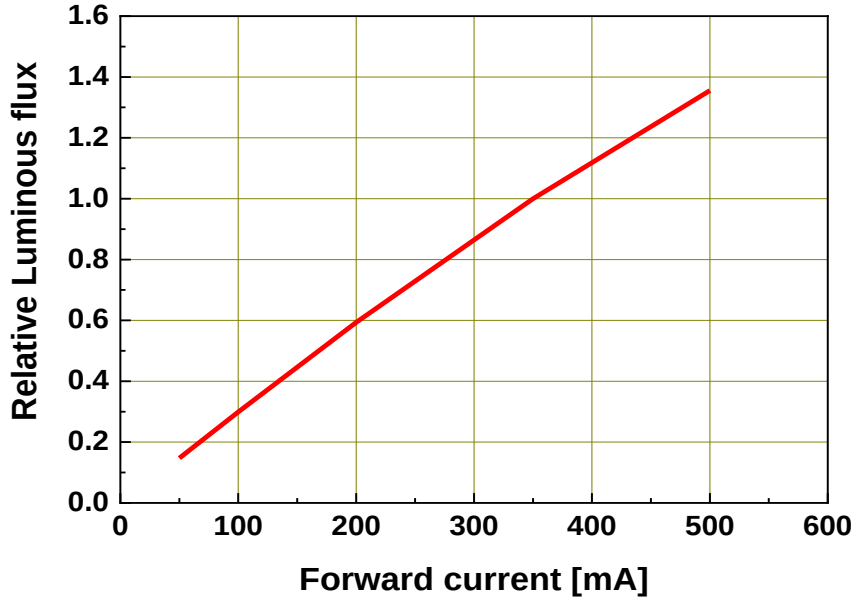

Copyright©2016,Everlight All Rights Reserved. Release Date:19.Dec.2024 Issue No:DSE-0033732 Rev.1

Relative Forward Voltage vs. Junction Temperature @ I_F=350mA

$$\Delta V_F = V_F - V_F(25^\circ C) = f(T_j)$$

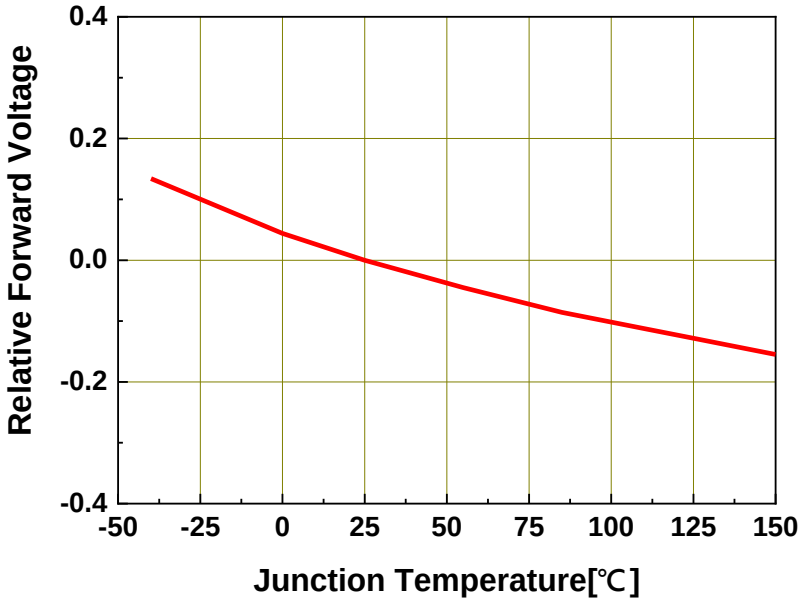

Relative Luminous Flux vs. Junction Temperature @ I_F=350mA

$$\Phi_V / \Phi_V(25^\circ C) = f(T_j)$$

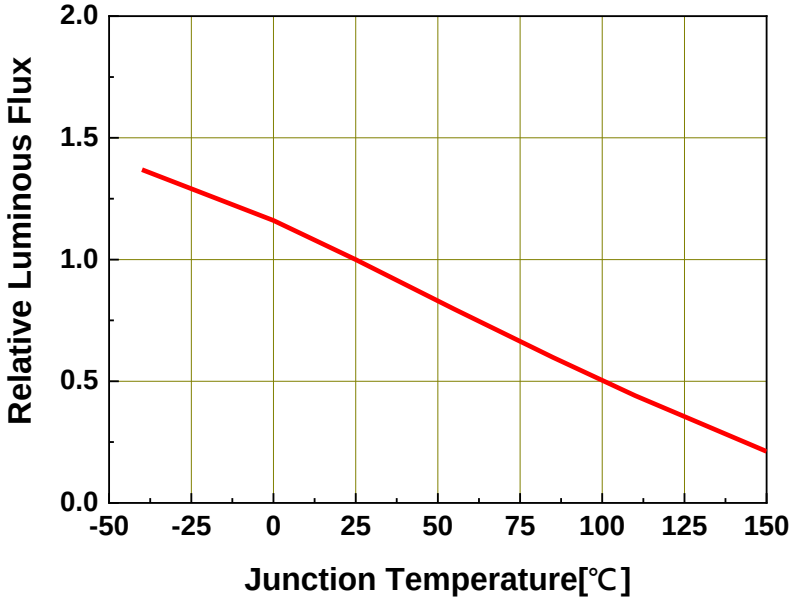

Copyright©2016,Everlight All Rights Reserved. Release Date:19.Dec.2024 Issue No:DSE-0033732 Rev.1

Relative Wavelength vs. Junction Temperature @ I_F=350mA

$$\Delta\lambda_d = \lambda_d - \lambda_d(25^\circ C) = f(T_j)$$

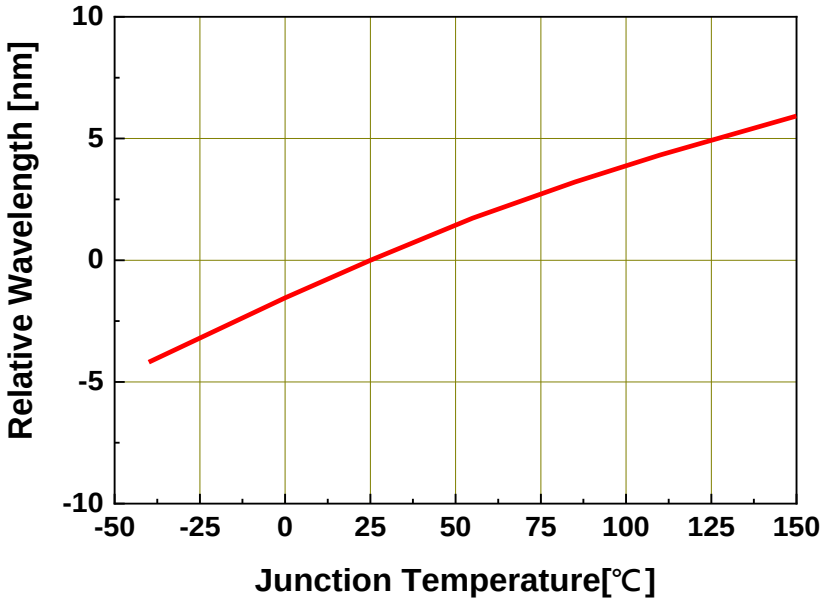

Forward Current Derating Curve

$$I_F = f(T_S)$$

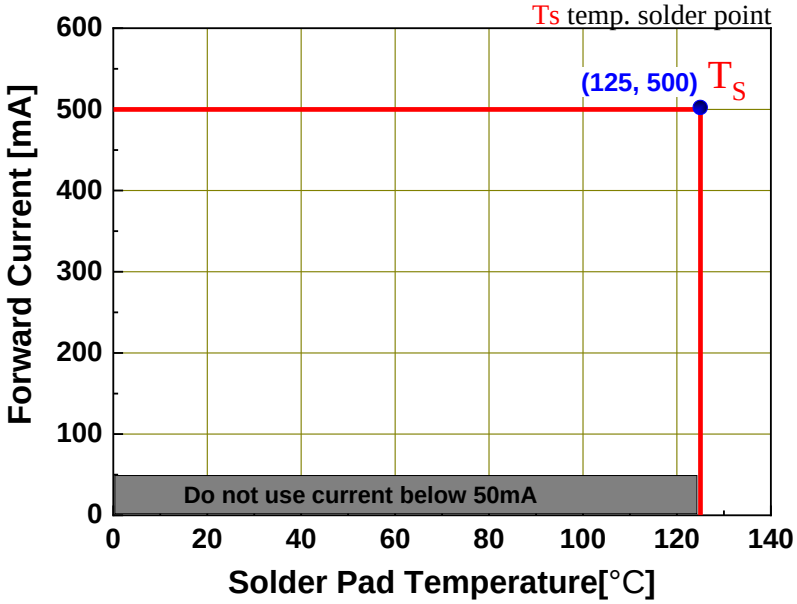

Copyright©2016,Everlight All Rights Reserved. Release Date:19.Dec.2024 Issue No:DSE-0033732 Rev.1

Permissible Pulse Handling Capability

$I_F = f(t_p)$；D=Duty cycle , Ts = 25˚C

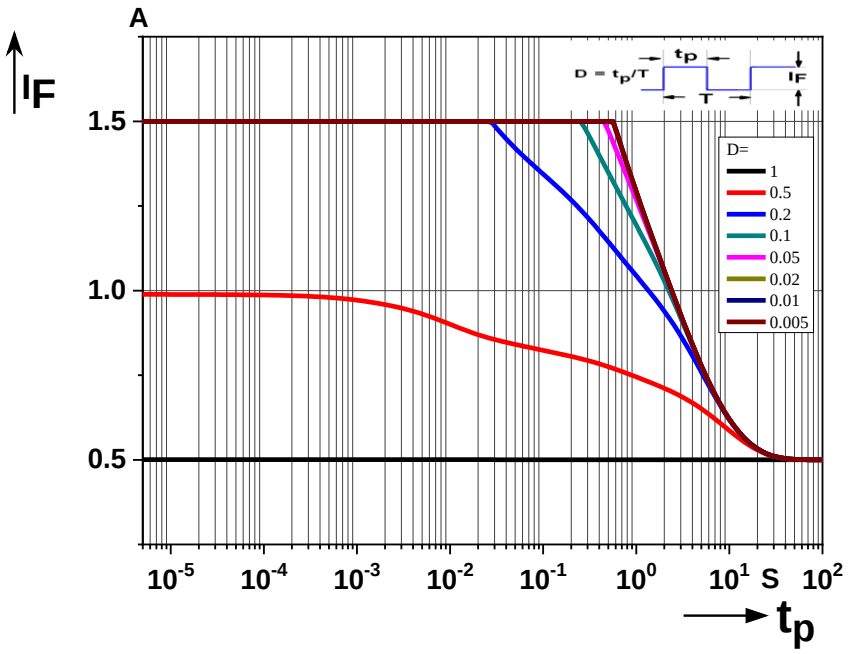

Copyright©2016,Everlight All Rights Reserved. Release Date:19.Dec.2024 Issue No:DSE-0033732 Rev.1

7. Part Number

2820-SR3501H-AM

Part number is designated with below details

- 2820 = Product family name.
- SR= Color.
- 350 = Test current [mA].
- 1 = Lead Frame Type (0=Ag ; 1=Au).
- H = Brightness Level (H=High; M=Medium; L=Low).
- AM = Automotive application.

Notes：

Color

Symbol	Description
C	Cool White
N	Neutral White
WW	Warm White
PA	Phosphor Converted Amber
PR	Phosphor Converted Red
UB	Blue
IB	Ice Blue
SB	Sky Blue
UP	Purple
UG	Green
UY	Yellow
UYG	Brilliant Yellow Green
UPG	Pale Green
UA	Amber
UR	Red
SR	Super Red
RGB	RGB-Color
PYG	Phosphor Converted Yellow Green

Copyright©2016,Everlight All Rights Reserved. Release Date:19.Dec.2024 Issue No:DSE-0033732 Rev.1

8. Ordering Information

Part Number	Order Code
2820-SR3501H-AM	2820-SR3501H-ABCDEFGHIJKL-MN-AM

Order code contains information with below details：

1.ABCD = min/max wavelength or CCT.

2.EFGH = min./max. luminous flux in [lm] or luminous intensity in [mcd].

3.IJKL= min./max. forward voltage.

4.MN = Packing code.

5.AM = Automotive Application.

Copyright©2016,Everlight All Rights Reserved. Release Date:19.Dec.2024 Issue No:DSE-0033732 Rev.1

9. Reflow Soldering Profile

Soldering Condition (Reference: IPC/JEDEC J-STD-020D)

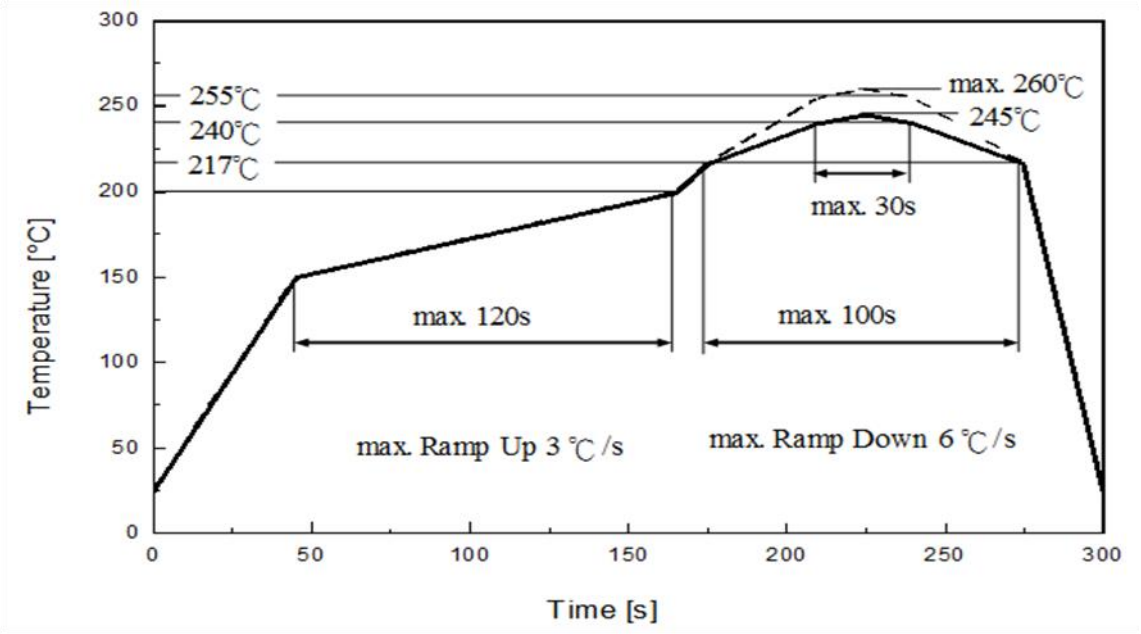

Profile Feature	Pb-Free Assembly Recommendation	Unit
Ramp-up rate to preheat 25 °C to 150 °C	3	°C /sec
Time of soaking zone 150 °C to 200 °C	120	sec
Ramp-up rate to peak	3	°C /sec
Liquid's temperature	217	°C
Time above liquid's temperature	100	sec
Peak temperature (max.)	260	°C
Time within 5°C of the specified peak temperature	30	sec
Ramp-down Rate (max.)	6	°C /sec

Copyright©2016,Everlight All Rights Reserved. Release Date:19.Dec.2024 Issue No:DSE-0033732 Rev.1

10. Packaging Information

● Product Labeling



- CPN：Customer's Product Number
- P/N：Everlight Part Number
- QTY：Packing Quantity
- CAT：Luminous Flux (Brightness) Bin
- HUE：Color Bin
- REF：Forward Voltage Bin
- LOT No：Lot Number

● Packing: Loaded Quantity 2000 pcs Per Reel

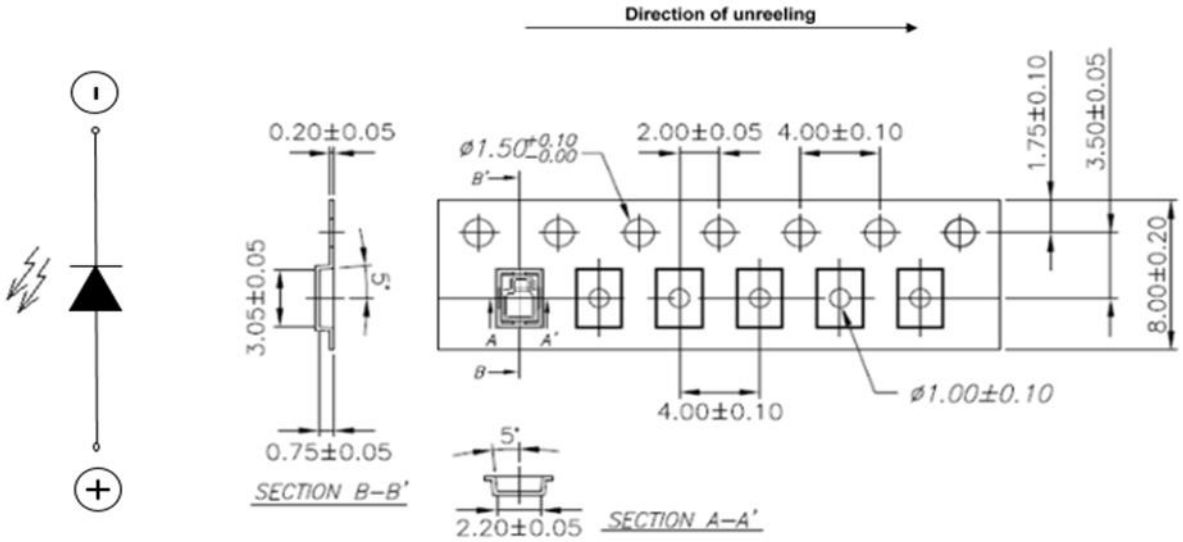

Notes：

1.Dimensions are in millimeters.

Copyright©2016,Everlight All Rights Reserved. Release Date:19.Dec.2024 Issue No:DSE-0033732 Rev.1

● Reel Dimensions

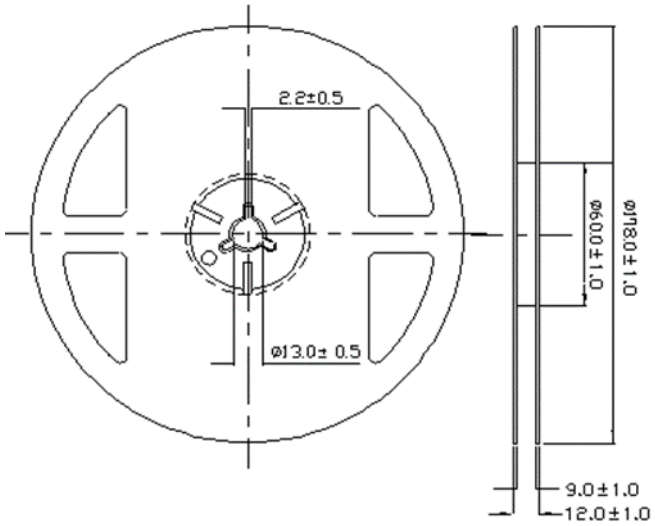

Notes：

1.Dimensions are in millimeters.

● Moisture Resistant Packing Process

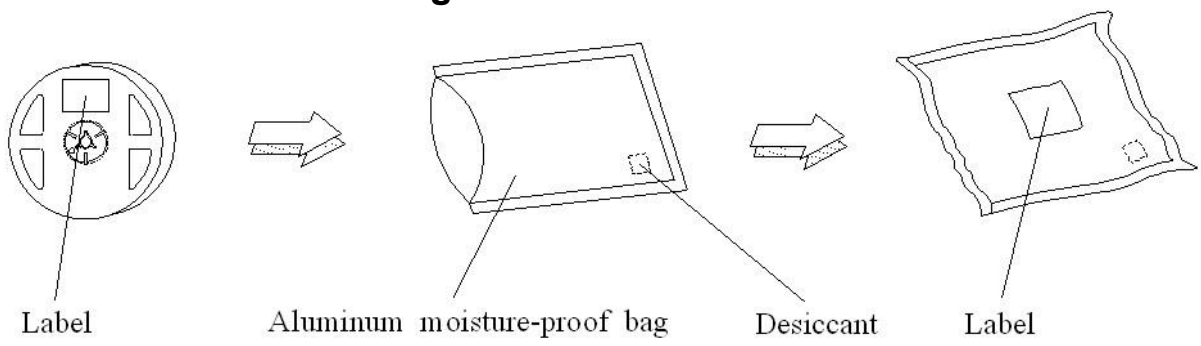

Copyright©2016,Everlight All Rights Reserved. Release Date:19.Dec.2024 Issue No:DSE-0033732 Rev.1

11. Precaution for Use

1. Over-current-proof

   Customer must apply resistors for protection; otherwise slight voltage shift will cause big current change (burn out will happen)。

2. Assemblies

   Do not stack assemblies containing LEDs to prevent damage to the optical surface of LEDs. Forces applied to the optical surface may result in the surface being damaged。

3. Soldering Condition

   3.1 When soldering, do not put stress on the LEDs during heating。

   3.2 After soldering, do not warp the circuit board。

4. Soldering Iron

   Each terminal is to go to the tip of soldering iron temperature less than 350℃ for 3 seconds within once in less than the soldering iron capacity 25W. Leave two seconds and more intervals, and do soldering of each terminal. Be careful because the damage of the product is often started at the time of the hand solder。

5. Repairing

   Repair should not be done after the LEDs have been soldered. When repairing is unavoidable, a double-head soldering iron should be used (as below figure). It should be confirmed beforehand whether the characteristics of the LEDs will or will not be damaged by repairing.

6. Reverse Operation

   This product is intended to be operated applying a forward current within the specified range. Applying any continuous reverse bias or forward bias below the voltage range of light emission shall be avoided because it may cause migration which can change the electro-optical characteristics or damage the LED.

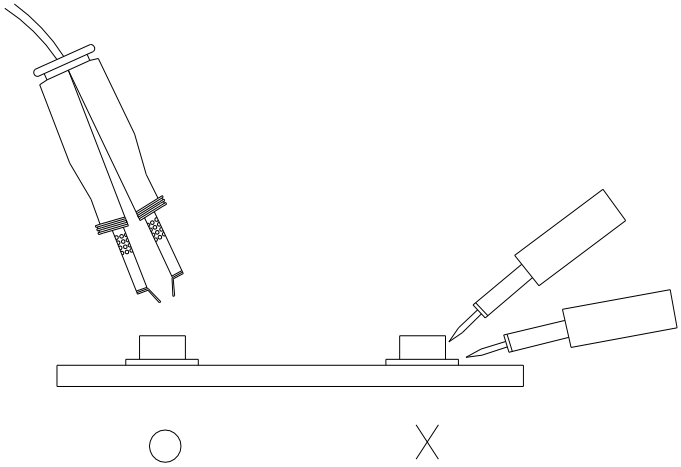

Copyright©2016,Everlight All Rights Reserved. Release Date:19.Dec.2024 Issue No:DSE-0033732 Rev.1

12. Sulfur Test Criteria

Products	Failure Criteria
Exterior Lighting products	Luminous Flux +/-20%, forward voltage +/-10%, color coordinates x, y +/-0.01, color wavelength +/- 2 nm Visual defect issue following Everlight's inspection criteria
Interior lighting products	Luminous Flux +/-30% or +/-50% for some application, forward voltage +/-10%, color coordinates x, y +/-0.02, color wavelength +/- 2 nm Visual defect issue following Everlight's inspection criteria

H2S test	Grade A0	Grade A1	Grade B0	Grade B1
Class A	Pass ΔIV, ΔColor, ΔVF criteria No Corrosion	Pass ΔIV, ΔColor, ΔVF criteria Corrosion without the impact on reliability and lifetime		
Class B			Pass ΔIV, ΔColor, ΔVF criteria No Corrosion	Pass ΔIV, ΔColor, ΔVF criteria Corrosion without the impact on reliability and lifetime

Condition for H2S and FMG	Description	
	H2S	FMG
Class A	15 ppm with duration 336 h at 40 °C and 90% RH	Duration 500 h at 25 °C and 75% RH. H2S concentration: 10ppb SO2 concentration: 200ppb NO2 concentration: 200ppb Cl2 concentration: 10ppb
Class B	10 ppm with duration 500 h at 25 °C and 75% RH	

Grade for H2S Test	Description
0	No Corrosion
1	Corrosion without the impact on reliability and lifetime

Copyright©2016,Everlight All Rights Reserved. Release Date:19.Dec.2024 Issue No:DSE-0033732 Rev.1