DATASHEET

EVERLIGHT AUTOMOTIVE

EL SIDE VIEW LED
5515-RGB020AH-AM



Features

- Package：SMD package
- Color：Red, Green, Blue
- Typ. Luminance Intensity：Red 1120mcd, Green 2800 mcd, Blue 450 mcd @20mA
- Viewing angle：120°
- ESD：2kV
- MSL：3
- Qualified AEC-Q102
- Corrosion Robustness Class: B1
- The product itself will remain within RoHS compliant version
- Compliance with EU REACH
- Compliance Halogen Free .(Br <900 ppm ,Cl <900 ppm , Br+Cl < 1500 ppm)

Applications

- Automotive interior lighting
- Ambient light
- Switches

Contents

1. Characteristics 3
2. Absolute Maximum Ratings 4
3. Characteristics Graph 5
4. Binning Information 12
5. Part Number 14
6. Ordering Information 15
7. Mechanical Dimension 16
8. Recommended Soldering Pad 17
9. Reflow Soldering Profile 17
10. Packaging Information 18
11. Precaution for Use 20
12. Sulfur TestCriteria 21

Copyright © 2021, Everlight All Rights Reserved. Release Date: Oct.25.2023 Issue No:DSE-0027301 Rev.5.0

Ver.:5 Release Date:10/31/2023 狀態:Temp.Approved(暫時錄行)

1. Characteristics

Parameter			Symbol	Min.	Typ.	Max.	Unit	Condition
Forward Current		Red	I_F	5	20	50	mA	---
		Green		5	20	30		
		Blue		5	20	30		
Luminous Intensity [1][2]		Red	I_V	710	1120	1400	mcd	I_F=20mA
		Green		1800	2800	3550		
		Blue		280	450	710		
Forward Voltage [2][3][4]		Red	V_F	1.75	2.00	2.75	V	I_F=20mA
		Green		2.5	2.75	3.5		
		Blue		2.75	3.00	3.75		
Dominant Wavelength [2][5]		Red	λ_d	618	621	630	nm	I_F=20mA
		Green		520	527	535		
		Blue		450	467	470		
Viewing Angle		Red	2φ	---	120	---	deg	I_F=20mA
		Green		---	120	---		
		Blue		---	120	---		
Thermal Resistance (Junction to Solder)	Real	Red	$R_{th\ JS\ real}$	---	---	52	K/W	I_F=20mA
		Green		---	---	85		
		Blue		---	---	85		
	Electrical	Red	$R_{th\ JS\ el}$	---	---	37		
		Green		---	---	65		
		Blue		---	---	65		

Notes:

1. Measurement tolerance of Brightness: ±8%
2. The measured data at thermal pad=25°C
3. Measurement tolerance of Forward voltage: ±0.05V
4. The V_F range shown in the table above indicates 99% output
5. Measurement tolerance of Dominant Wavelength：±1nm

Copyright © 2021, Everlight All Rights Reserved. Release Date: Oct.25.2023 Issue No:DSE-0027301 Rev.5.0
www.everlight.com
Ver.:5 Release Date:10/31/2023 狀態:Temp.Approved(暫時發行)

2. Absolute Maximum Ratings

Parameter	Symbol	Ratings			Unit
		Red	Green	Blue	
Power Dissipation	P_d	137.5	105	112.5	mW
Forward Current	I_F	50	30	30	mA
Surge Current (t<=10 μs; D=0.005; T_s=25 ℃)	I_{FM}	300	250	250	mA
Reverse Voltage	V_R	Not designed for reverse operation			V
Junction Temperature	T_J	125			°C
Operating Temperature	T_{opr}	-40 ~ +110			°C
Storage Temperature	T_{stg}	-40 ~ +110			°C
ESD Sensitivity (R=1.5kΩ, C= 100pF)	ESD_{HBM}	2	2	2	kV
Soldering Temperature	Reflow	260°C for 30sec			°C

Copyright © 2021, Everlight All Rights Reserved. Release Date: Oct.25.2023 Issue No:DSE-0027301 Rev.5.0

Ver.:5 Release Date:10/31/2023 狀態:Temp.Approved(暫時許行)

3. Characteristics Graph

Wavelength Characteristics Relative Spectral Distribution
@ Ts = 25°C, I_F=20mA

$$\Phi_V / \Phi_V\,(Max.) = f(\lambda)$$

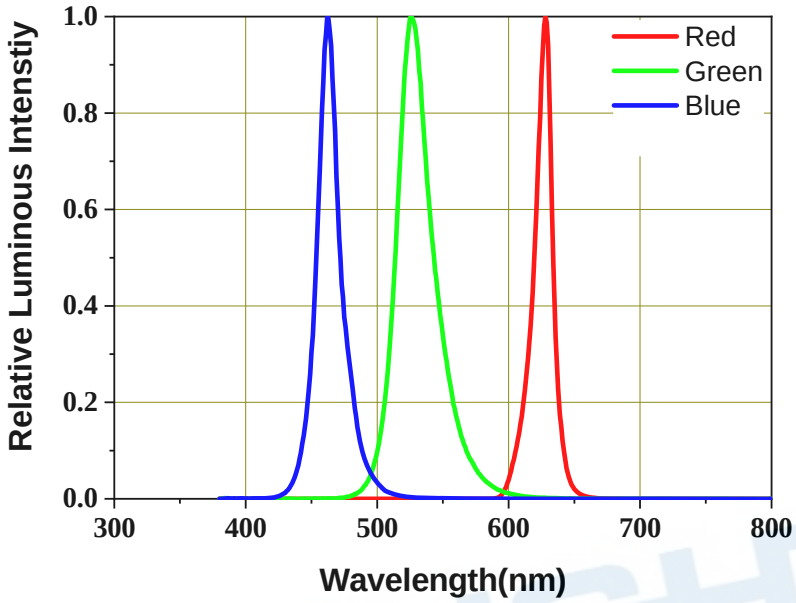

Typical Diagram Characteristics of Radiation

$$\Phi_V / \Phi_V\,(0^\circ) = f(\varphi)$$

Notes:

1. φ is the off axis angle from lamp centerline where the luminous intensity is 1/2 of the peak value
2. View angle tolerance is ± 5°

Copyright © 2021, Everlight All Rights Reserved. Release Date: Oct.25.2023 Issue No:DSE-0027301 Rev.5.0
www.everlight.com
Ver.:5 Release Date:10/31/2023 狀態:Temp Approved(暫時發行)

Forward Current vs. Forward Voltage
@ Ts = 25°C

$I_F = f(V_F)$

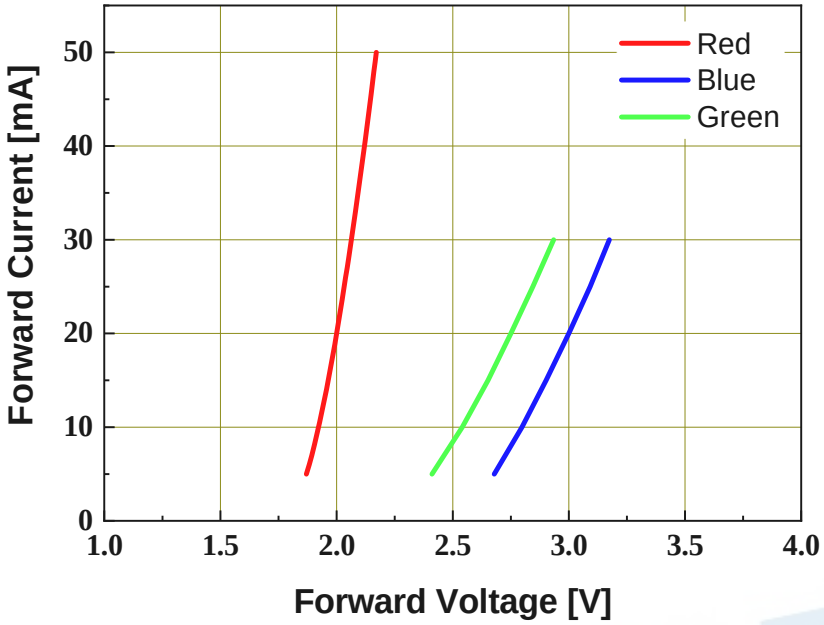

Relative Luminous Intensity vs. Forward Current
@ Ts = 25°C

$\Phi_V / \Phi_V(20mA) = f(I_F)$

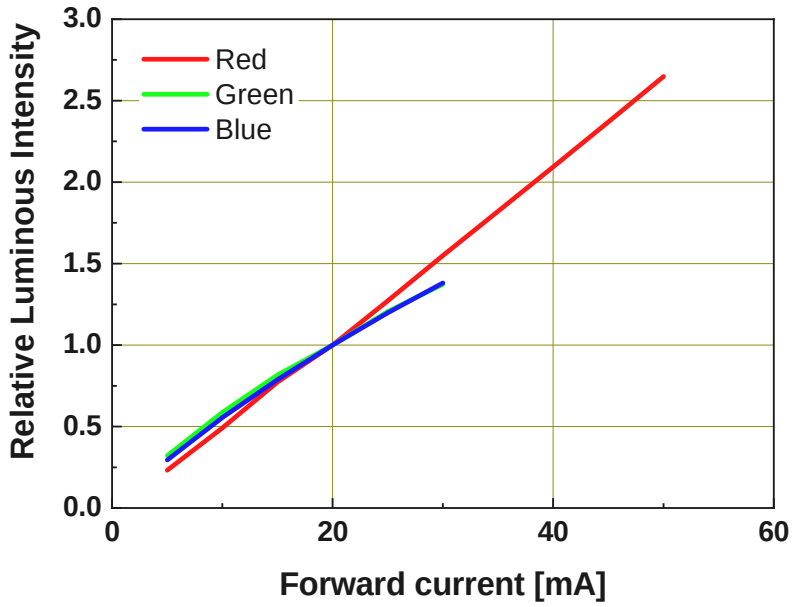

Copyright © 2021, Everlight All Rights Reserved. Release Date: Oct.25.2023 Issue No:DSE-0027301 Rev.5.0
Ver.:5 Release Date:10/31/2023 狀態:Temp.Approved(暫時發行)

Dominant Wavelength vs. Forward Current (Red)
@ Ts = 25°C

$\lambda_d = f(I_F)$

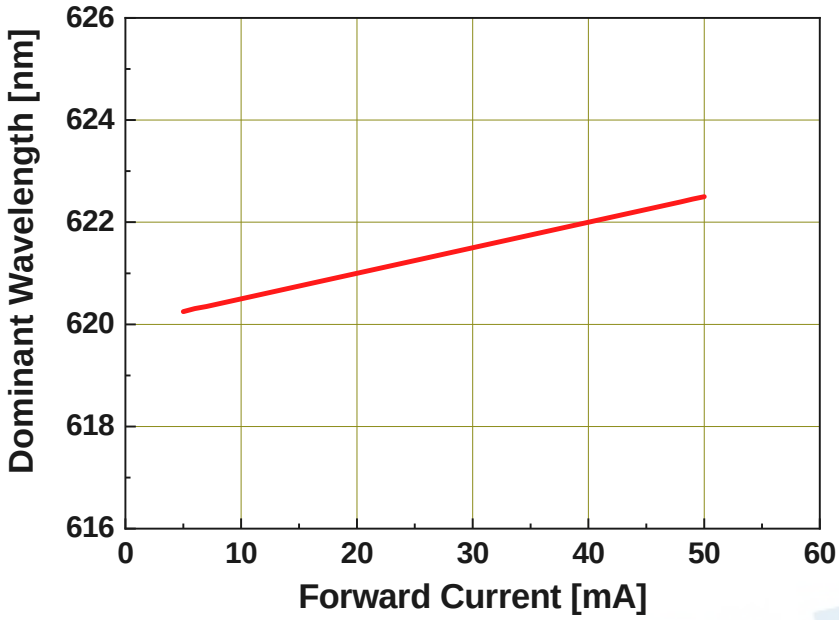

Dominant Wavelength vs. Forward Current (Green)
@ Ts = 25°C

$\lambda_d = f(I_F)$

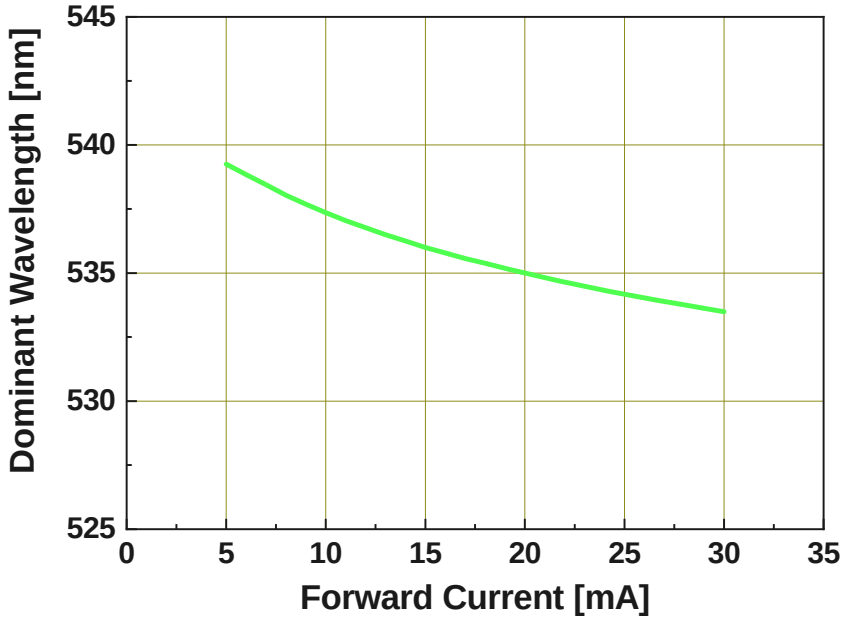

Copyright © 2021, Everlight All Rights Reserved. Release Date: Oct.25.2023 Issue No:DSE-0027301 Rev.5.0

Ver.:5 Release Date:10/31/2023 狀態:Temp.Approved(暫時發行)

Dominant Wavelength vs. Forward Current (Blue)

@ Ts = 25°C

$$\lambda_d = f(I_F)$$

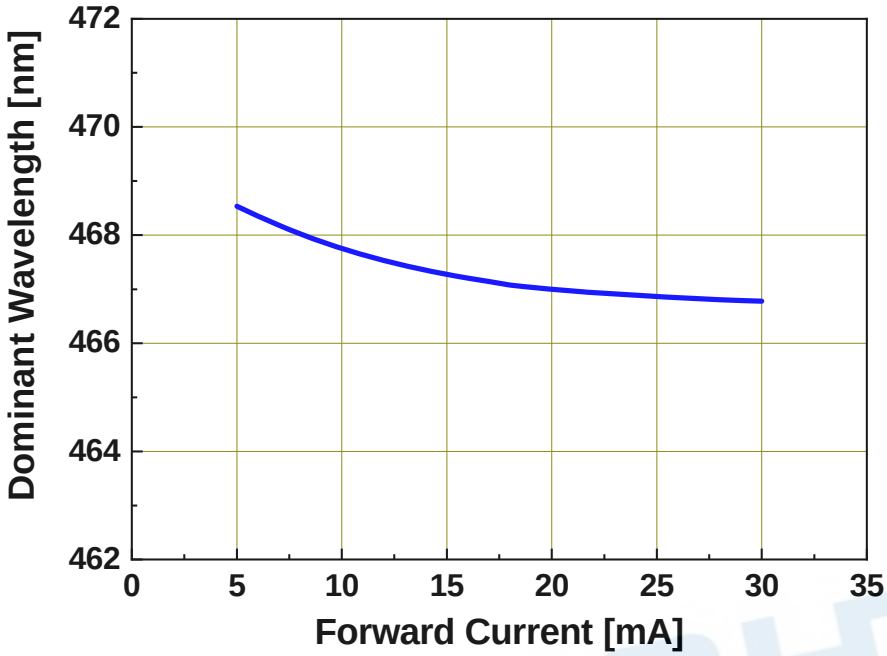

Relative Forward Voltage vs. Junction Temperature

@ IF=20mA

$$\Delta V_F = V_F - V_F(25^\circ C) = f(T_j)$$

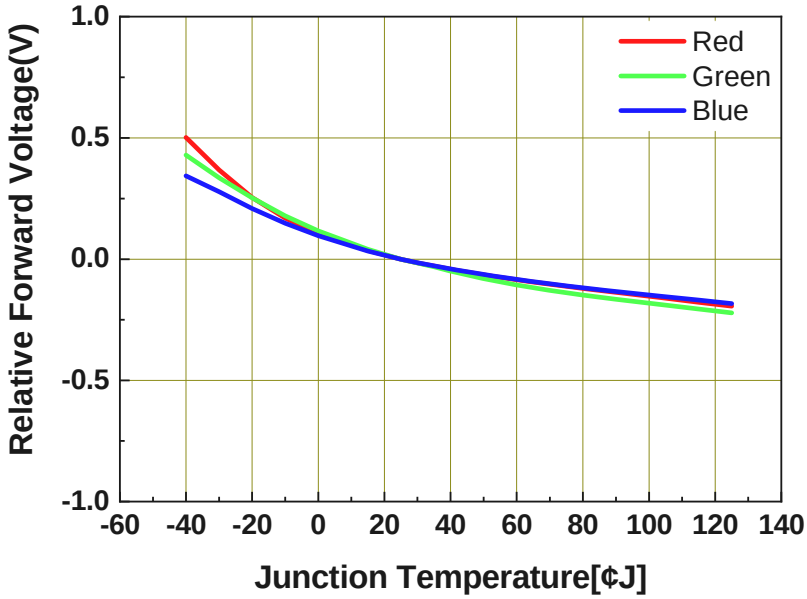

Copyright © 2021, Everlight All Rights Reserved. Release Date: Oct.25.2023 Issue No:DSE-0027301 Rev.5.0
www.everlight.com
Ver.:5 Release Date:10/31/2023 狀態:Temp.Approved(暫時發行)

Relative Luminous Intensity vs. Junction Temperature

@ I_F=20mA

$$\Phi_V / \Phi_V(25^\circ C) = f(T_j)$$

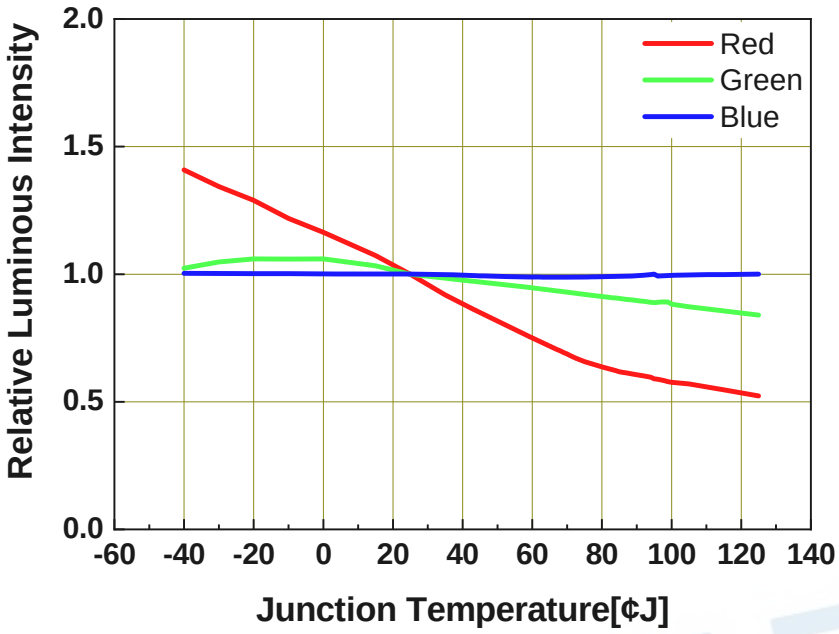

Dominant Wavelength Shift vs. Junction Temperature

@ I_F=20mA

$$\Delta\lambda_d = \lambda_d - \lambda_d(25^\circ C) = f(T_j)$$

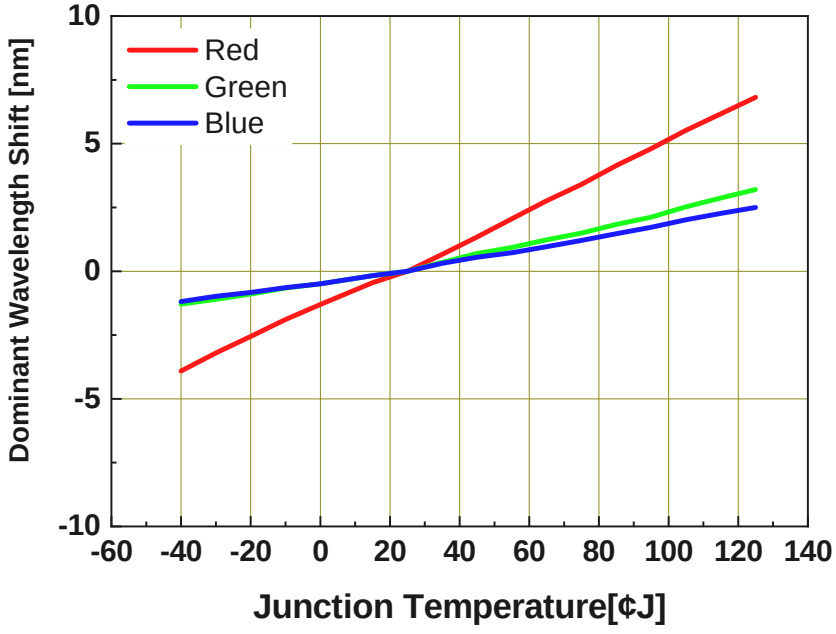

Copyright © 2021, Everlight All Rights Reserved. Release Date: Oct.25.2023 Issue No:DSE-0027301 Rev.5.0
www.everlight.com
Ver.:5 Release Date:10/31/2023 狀態:Temp Approved(暫時發行)

Forward Current Derating Curve (Red)

$I_F = f(T_S)$

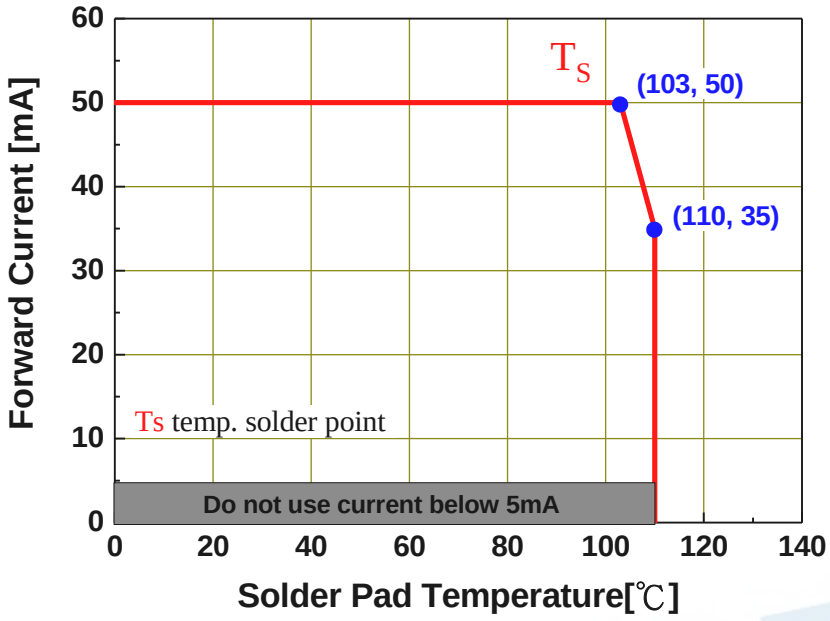

Forward Current Derating Curve (Green,Blue)

$I_F = f(T_S)$

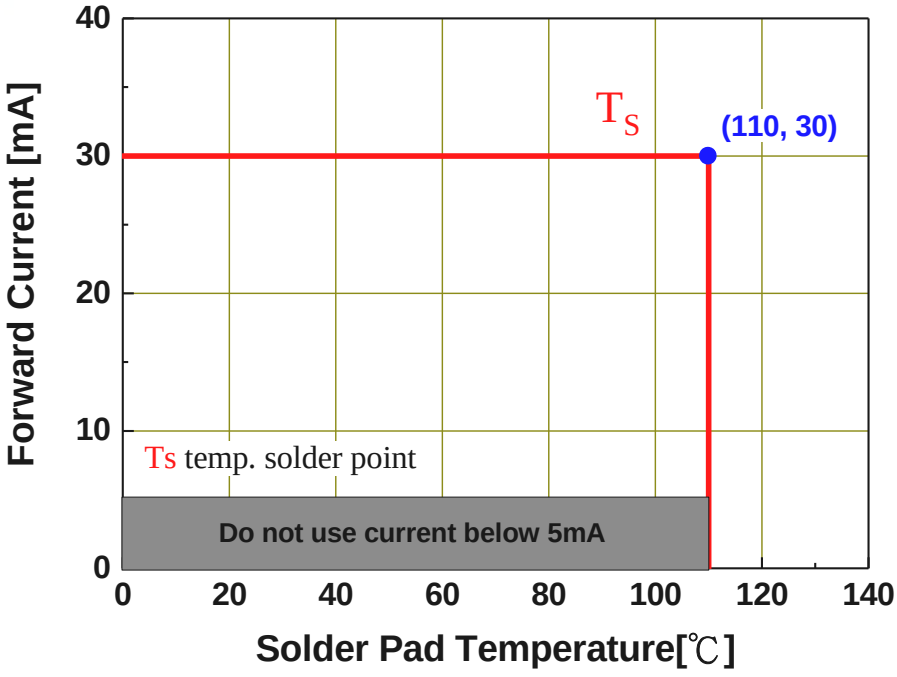

Permissible Pulse Handling Capability (Red)

Copyright © 2021, Everlight All Rights Reserved. Release Date: Oct.25.2023 Issue No:DSE-0027301 Rev.5.0

Ver.:5 Release Date:10/31/2023 狀態:Temp.Approved(暫時發行)

D=Duty cycle , T_S = 25℃

Permissible Pulse Handling Capability (Green,Blue)

D=Duty cycle , T_S = 25℃

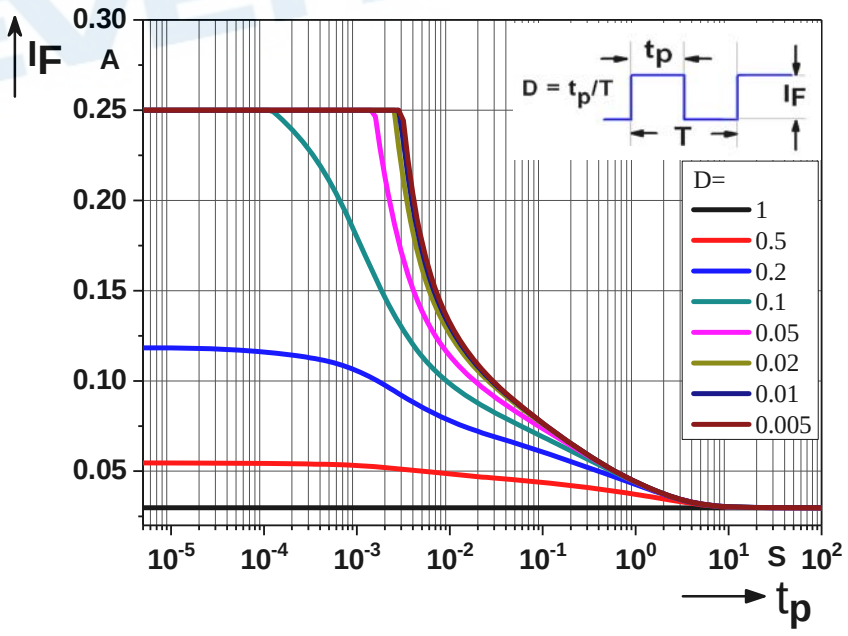

Copyright © 2021, Everlight All Rights Reserved. Release Date: Oct.25.2023 Issue No:DSE-0027301 Rev.5.0

Ver.:5 Release Date:10/31/2023 狀態:Temp.Approved(暫時發行)

4. Binning Information

Luminous Intensity Bins

Color	Bin Code	Minimum Luminous Intensity (mcd)	Maximum Luminous Intensity (mcd)
Red	V1	710	900
	V2	900	1120
	AA	1120	1400
Green	BA	1800	2240
	BB	2240	2800
	CA	2800	3550
Blue	T1	280	355
	T2	355	450
	U1	450	560
	U2	560	710

Notes:

1. Measurement tolerance of Luminous flux: ±8%.

Dominant Wavelength Bins

Color	Bin Code	Minimum Dominant Wavelength [nm]	Maximum Dominant Wavelength [nm]
Red	1822	618	622
	2226	622	626
	2630	626	630
Green	2025	520	525
	2530	525	530
	3035	530	535
Blue	5054	450	454
	5458	454	458
	5862	458	462
	6266	462	466
	6670	466	470

Notes:

1. Dominant wavelength measurement tolerance: ±1nm.

Copyright © 2021, Everlight All Rights Reserved. Release Date: Oct.25.2023 Issue No:DSE-0027301 Rev.5.0

Ver.:5 Release Date:10/31/2023 狀態:Temp.Approved(暫時發行)

Forward Voltage Bins

Color	Bin code	Minimum Forward Voltage [V]	Maximum Forward Voltage [V]
Red	1720	1.75	2.00
	2022	2.00	2.25
	2225	2.25	2.50
	2527	2.50	2.75
Green	2527	2.5	2.75
	2730	2.75	3.00
	3032	3.00	3.25
	3235	3.25	3.50
Blue	2730	2.75	3.00
	3032	3.00	3.25
	3235	3.25	3.50
	3537	3.50	3.75

Notes:

1. Forward voltage measurement tolerance: ±0.05V
2. Forward voltage bins are defined at I_F = typical input current

Copyright © 2021, Everlight All Rights Reserved. Release Date: Oct.25.2023 Issue No:DSE-0027301 Rev.5.0

Ver.:5 Release Date:10/31/2023 狀態:Temp.Approved(暫時發行)

5. Part Number

5515-RGB020AH-AM

Part number is designated with below details.

5515 = Product family name

RGB = Color [1]

020 = Test current [mA]

0H = Internal code

AM = Automotive application

Notes:

[1] Color：

Symbol	Description
C	Cool White
N	Neutral White
W	Warm White
PA	Phosphor Converted Amber
PR	Phosphor Converted Red
UB	Blue
IB	Ice Blue
SB	Sky Blue
UP	Purple
UG	Green
UY	Yellow
UYG	Brilliant Yellow Green
UPG	Pale Green
UA	Amber
UR	Red
SR	Super Red
RGB	RGB Color
PYG	Phosphor Converted Yellow Green

Copyright © 2021, Everlight All Rights Reserved. Release Date: Oct.25.2023 Issue No:DSE-0027301 Rev.5.0

Ver.:5 Release Date:10/31/2023 狀態:Temp.Approved(暫時發行)

6. Ordering Information

5515-RGB020AH-ABC-DE-AM

Part Number of the 5515-RGB	Order Code
5515-RGB020AH-AM	5515-RGB020AH-A01-2T-AM

Order code contains information with below details：

ABC = Please refer to the table of group bin code [1]

DE = Internal code

AM = Automotive Application

Notes:

[1] Table of Group Bin bin

Group Bin code	Color	Dominant Wavelength (nm)	Luminous Intensity (mcd)	Forward Voltage (V)
A01	Red	618-630	V1AA	1727
	Green	520-535	BACA	2737
	Blue	458-470	T1U2	2737

Copyright © 2021, Everlight All Rights Reserved. Release Date: Oct.25.2023 Issue No:DSE-0027301 Rev.5.0

Ver.:5 Release Date:10/31/2023 狀態:Temp.Approved(暫時發行)

7. Mechanical Dimension

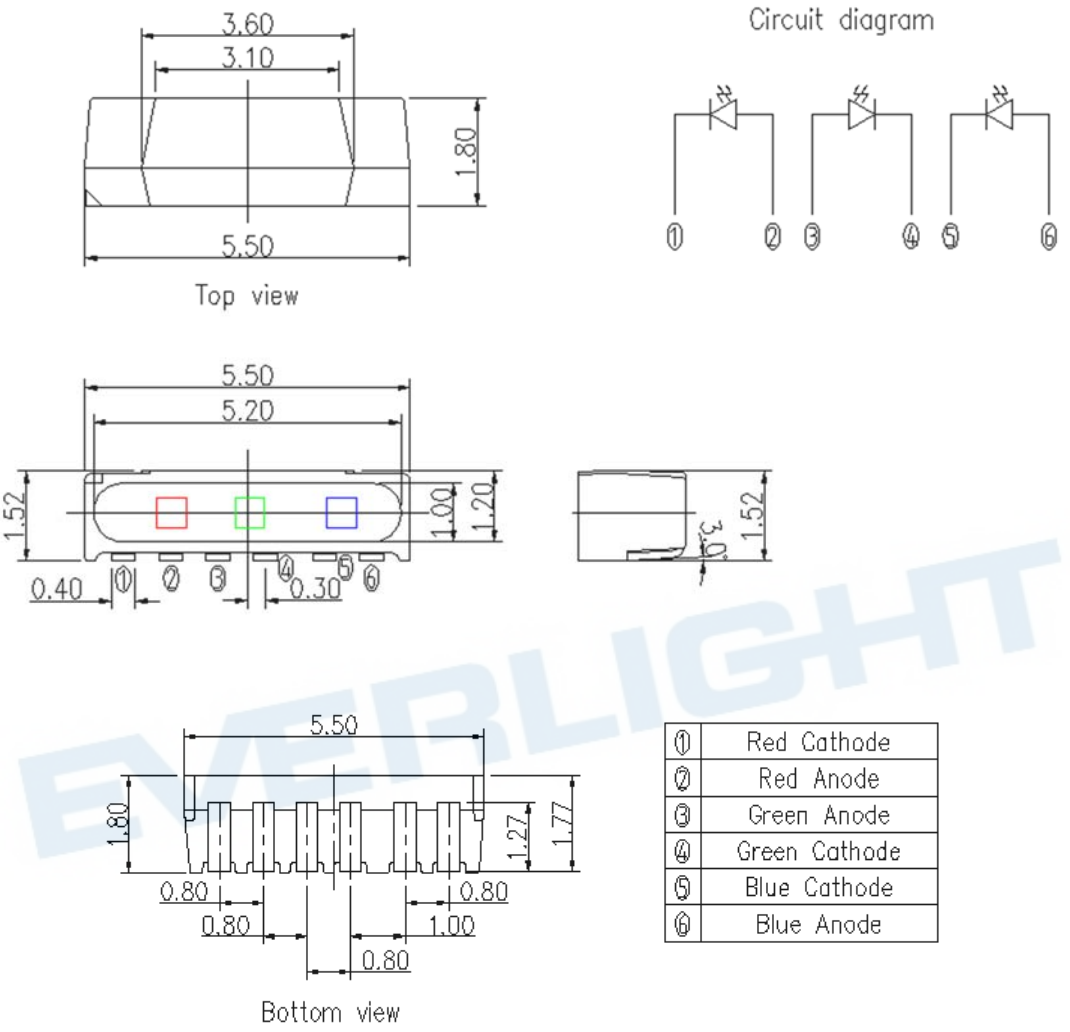

Notes:

1. Dimensions are in millimeters.
2. Tolerances unless mentioned are ± 0.1mm.

Copyright © 2021, Everlight All Rights Reserved. Release Date: Oct.25.2023 Issue No:DSE-0027301 Rev.5.0

Ver.:5 Release Date:10/31/2023 狀態:Temp.Approved(暫時發行)

8. Recommended Soldering Pad

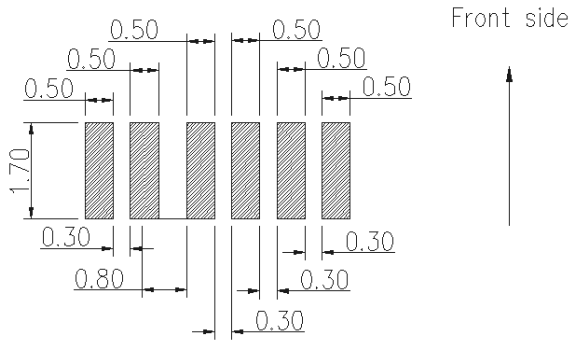

9. Reflow Soldering Profile

Soldering Condition (Reference: IPC/JEDEC J-STD-020D)

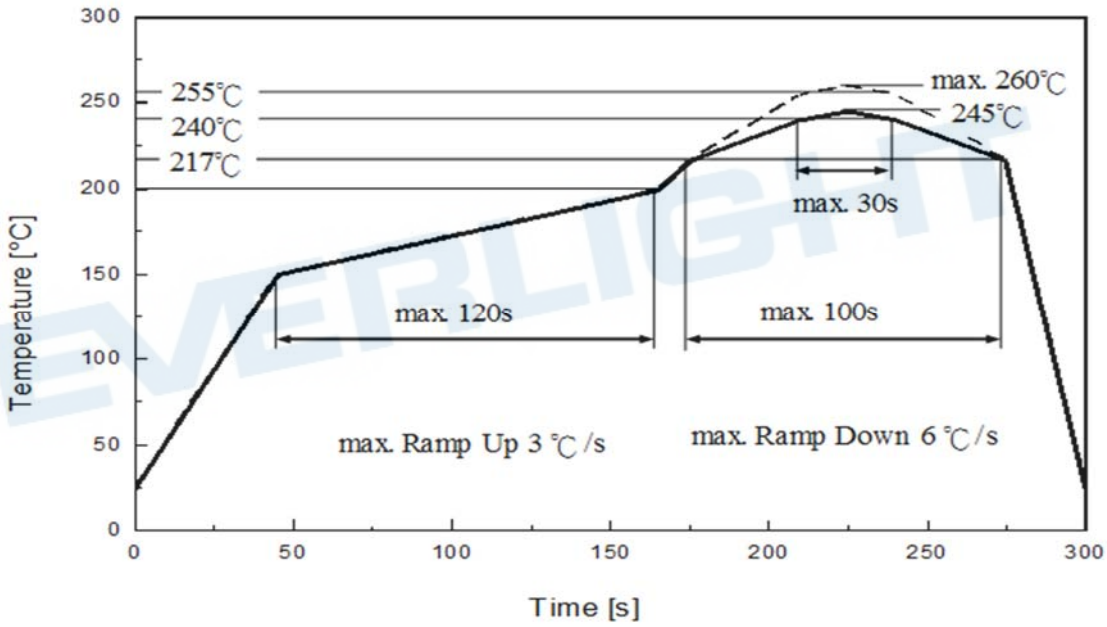

Profile Feature	Recommendation for Pb-Free Assembly	Unit
Ramp-up rate to preheat: 25 °C to 150 °C	3	°C /sec
Time of soaking zone: 150 °C to 200 °C	120	sec
Ramp-up rate to peak	3	°C /sec
Liquidus temperature	217	°C
Time above liquidus temperature	100	sec
Peak temperature (max.)	260	°C
Time within 5°C of the specified peak temperature	30	sec
Ramp-down Rate (max.)	6	°C /sec

Copyright © 2021, Everlight All Rights Reserved. Release Date: Oct.25.2023 Issue No:DSE-0027301 Rev.5.0
Ver.:5 Release Date:10/31/2023 狀態:Temp.Approved(暫時發行)

10. Packaging Information

• Product Labeling



- CPN：Customer's Product Number
- P/N ：Everlight Part Number
- QTY：Packing Quantity
- CAT：Brightness Bin
- HUE：Color Bin
- REF：Forward Voltage Bin
- LOT No：Lot Number

• Packing: Loaded Quantity 2000 pcs Per Reel

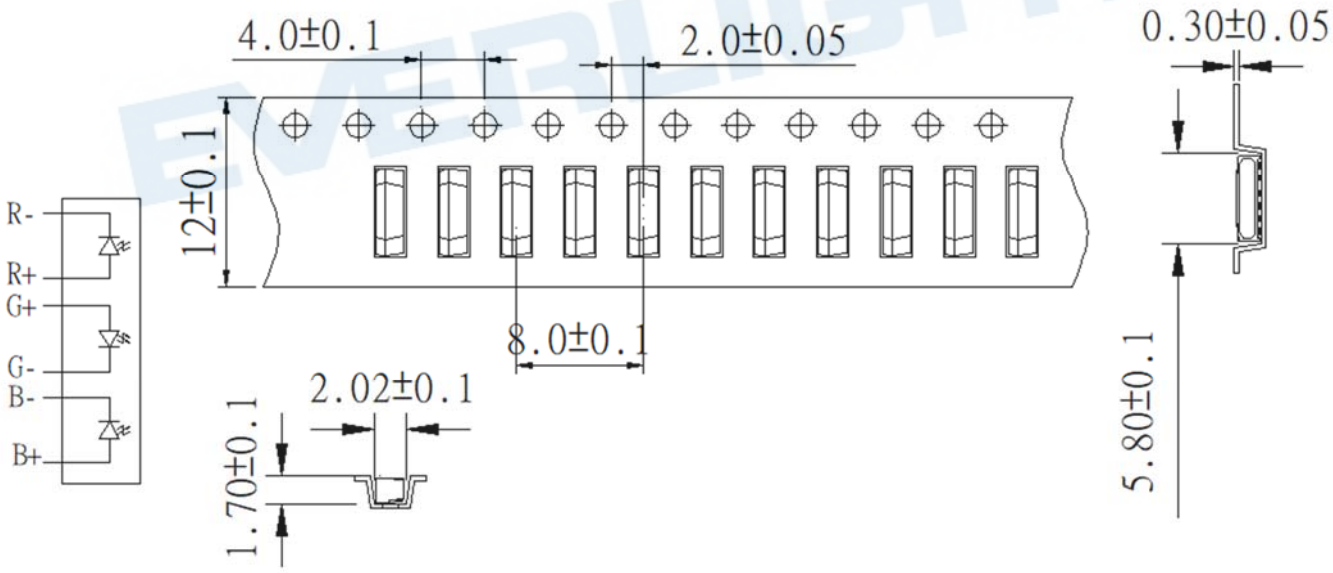

Notes:

1. Dimensions are in millimeters
2. Tolerances unless mentioned are ± 0.1mm

Copyright © 2021, Everlight All Rights Reserved. Release Date: Oct.25.2023 Issue No:DSE-0027301 Rev.5.0

Ver.:5 Release Date:10/31/2023 狀態:Temp.Approved(暫時發行)

● Reel Dimensions

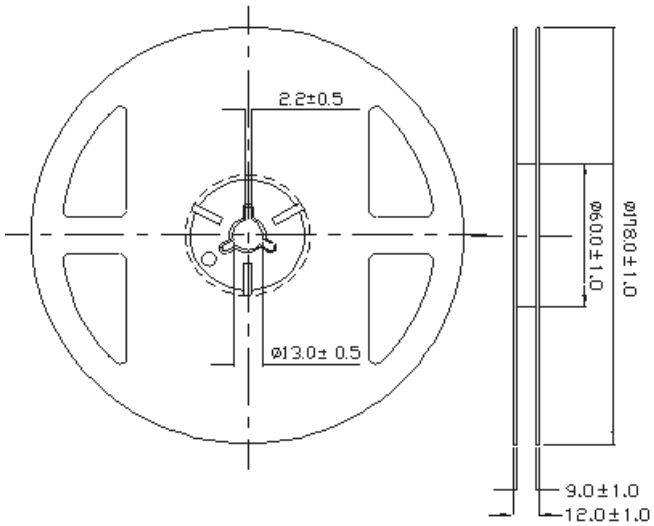

Notes:

1. Dimensions are in millimeters.

● Moisture Resistant Packing Process

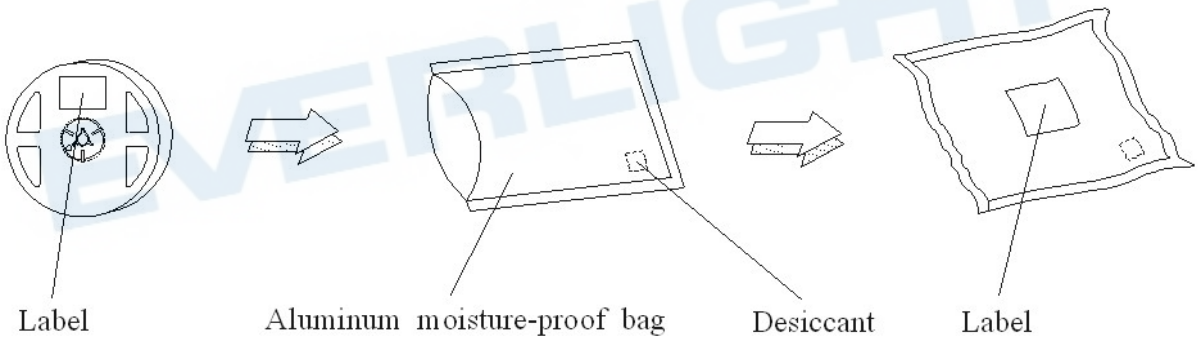

Copyright © 2021, Everlight All Rights Reserved. Release Date: Oct.25.2023 Issue No:DSE-0027301 Rev.5.0

Ver.:5 Release Date:10/31/2023 狀態:Temp.Approved(暫時發行)

11. Precaution for Use

1. Over-current-proof
   Customer must apply resistors for protection; otherwise slight voltage shift will cause big current change (burn out will happen).

2. Assemblies
   Do not stack assemblies containing LEDs to prevent damage to the optical surface of LEDs. Forces applied to the optical surface may result in the surface being damaged.

3. Soldering Condition
   3.1 When soldering, do not put stress on the LEDs during heating.
   3.2 After soldering, do not warp the circuit board.

4. Soldering Iron
   Each terminal is to go to the tip of soldering iron temperature less than 350℃ for 3 seconds within once in less than the soldering iron capacity 25W. Leave two seconds and more intervals, and do soldering of each terminal. Be careful because the damage of the product is often started at the time of the hand solder.

5. Repairing
   Repair should not be done after the LEDs have been soldered. When repairing is unavoidable, a double-head soldering iron should be used (as below figure). It should be confirmed beforehand whether the characteristics of the LEDs will or will not be damaged by repairing.

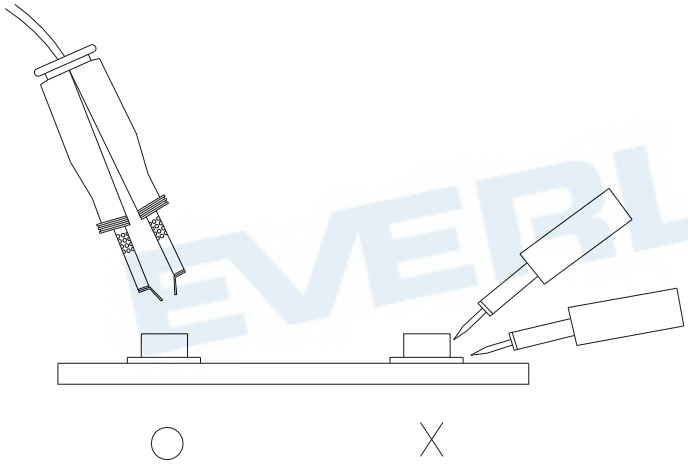

Copyright © 2021, Everlight All Rights Reserved. Release Date: Oct.25.2023 Issue No:DSE-0027301 Rev.5.0

Ver.:5 Release Date:10/31/2023 狀態:Temp.Approved(暫時錄行)

12. Sulfur Test Criteria

Products	Failure Criteria
Exterior Lighting products	Luminous Flux +/-20%, forward voltage +/-10%, color coordinates x,y +/-0.01, color wavelength +/- 2 nm Visual defect issue following Everlight's inspection criteria
Interior lighting products	Luminous Flux +/-30% or +/-50% for some application, forward voltage +/-10%, color coordinates x,y +/-0.02, color wavelength +/- 2 nm Visual defect issue following Everlight's inspection criteria

H2S test	Grade A0	Grade A1	Grade B0	Grade B1
Class A	Pass ΔIV, ΔColor, ΔVF criteria No Corrosion	Pass ΔIV, ΔColor, ΔVF criteria Corrosion without the impact on reliability and lifetime		
Class B			Pass ΔIV, ΔColor, ΔVF criteria No Corrosion	Pass ΔIV, ΔColor, ΔVF criteria Corrosion without the impact on reliability and lifetime

Condition for H2S and FMG	Description	
	H2S	FMG
Class A	15 ppm with duration 336 h at 40 °C and 90% RH	Duration 500 h at 25 °C and 75% RH. H2S concentration: 10ppb SO2 concentration: 200ppb NO2 concentration: 200ppb Cl2 concentration: 10ppb
Class B	10 ppm with duration 500 h at 25 °C and 75% RH	

Grade for H2S Test	Description
0	No Corrosion
1	Corrosion without the impact on reliability and lifetime

Copyright © 2021, Everlight All Rights Reserved. Release Date: Oct.25.2023 Issue No:DSE-0027301 Rev.5.0

Ver.:5 Release Date:10/31/2023 狀態:Temp.Approved(暫時錄行)

Revision History

Current version: 25.Oct.2023

Issue No: DSE-0027301

Version: 5.0

Created by: Youngho Na

Rev.	Subjects (major change in previous version)	Modified date
1.0	Preliminary datasheet	2022/3/21
2.0	Update binning form and graph of characteristics	2022/8/26
3.0	Add Sulfur test criteria Modify Green Voltage Bin, Change Part name	2022/12/26
4.0	Modify Wavelength Bin Rate	2023/02/20
5.0	Modify Vf Curve	2023/10/25

EVERLIGHT

Copyright © 2021, Everlight All Rights Reserved. Release Date: Oct.25.2023 Issue No:DSE-0027301 Rev.5.0

Ver.:5 Release Date:10/31/2023 狀態:Temp.Approved(暫時錄行)