EVERLIGHT AUTOMOTIVE

DATASHEET

EL Mini TOP VIEW LED
65-11-C70100L-AM



Features

- Package：PLCC 2 package
- Color：Cool White
- Typ. Luminance Intensity：200 mcd @ 10mA
- Viewing angle：120°
- ESD：8KV
- MSL：2
- Typ.color coordinates : (0.3,0.3)
- Qualified AEC-Q101
- The product itself will remain within RoHS compliant version
- Compliance with EU REACH
- Compliance Halogen Free .(Br <900 ppm ,CI <900 ppm , Br+Cl < 1500 ppm)

Applications

- Automotive Interior Lighting
- Switches
- Cluster

Contents

1. Characteristics 3
2. Absolute Maximum Ratings 4
3. Characteristics Graph 5
4. Binning Information 10
5. Part Number 15
6. Ordering Information 16
7. Mechanical Dimension 17
8. Recommended Soldering Pad 18
9. Reflow Soldering Profile 18
10. Packaging Information 19
11. Precaution for Use 21

EVERLIGHT

Copyright © 2016, Everlight All Rights Reserved. Release Date: 13.Mar.2019 Issue No: DSE-0016543 Rev.5

Ver.:5 Release Date:03/18/2019 狀態:Approved(正式發行)

1. Characteristics

Parameter		Symbol	Min.	Typ.	Max.	Unit	Condition
Forward Current		I_F	2	10	20	mA	---
Luminous Intensity		I_V	112	200	450	mcd	I_F=10mA
Forward Voltage		V_F	2.5	3.1	3.75	V	I_F=10mA
Viewing Angle		φ	---	120	---	deg	I_F=10mA
Color		CIE x	---	0.3	---		I_F=10mA
Color		CIE y	---	0.3	---	---	I_F=10mA
Thermal Resistance (Junction to Solder)	Real	$R_{th\ JS\ real}$	---	---	120	K/W	I_F=10mA
	Electrical	$R_{th\ JS\ el}$	---	---	95		

Notes:

1. Luminous Flux measurement tolerance: ±8%.
2. The data of Luminous Flux measured at thermal pad=25°C
3. Forward voltage measurement tolerance: ±0.05V
4. The V_F range shown in the table above indicates 99% output.
5. Tolerance of Chromaticity Coordinates x,y：±0.005

Copyright © 2016, Everlight All Rights Reserved. Release Date: 13.Mar.2019 Issue No: DSE-0016543 Rev.5

Ver.:5 Release Date:03/18/2019 狀態:Approved(正式發行)

2. Absolute Maximum Ratings

Parameter	Symbol	Ratings	Unit
Power Dissipation	P_d	75	mW
Forward Current	I_F	20	mA
Surge Current (t<=10 μs; D=0.005; T_s=25 ℃)	I_{FM}	100	mA
Reverse Voltage	V_R	Not designed for reverse operation	V
Junction Temperature	T_J	125	°C
Operating Temperature	T_{opr}	-40 ~ +110	°C
Storage Temperature	T_{stg}	-40 ~ +110	°C
ESD Sensitivity (R=1.5kΩ, C= 100pF)	ESD_{HBM}	8	kV
Soldering Temperature	Reflow	260°C for 30sec	°C

EVERLIGHT

Copyright © 2016, Everlight All Rights Reserved. Release Date: 13.Mar.2019 Issue No: DSE-0016543 Rev.5
Ver.:5 Release Date:03/18/2019 狀態:Approved(正式發行)

3. Characteristics Graph

Wavelength Characteristics Relative Spectral Distribution
@ Ts = 25°C, I_F=10mA

$\Phi_V / \Phi_V\,(Max.) = f(\lambda)$

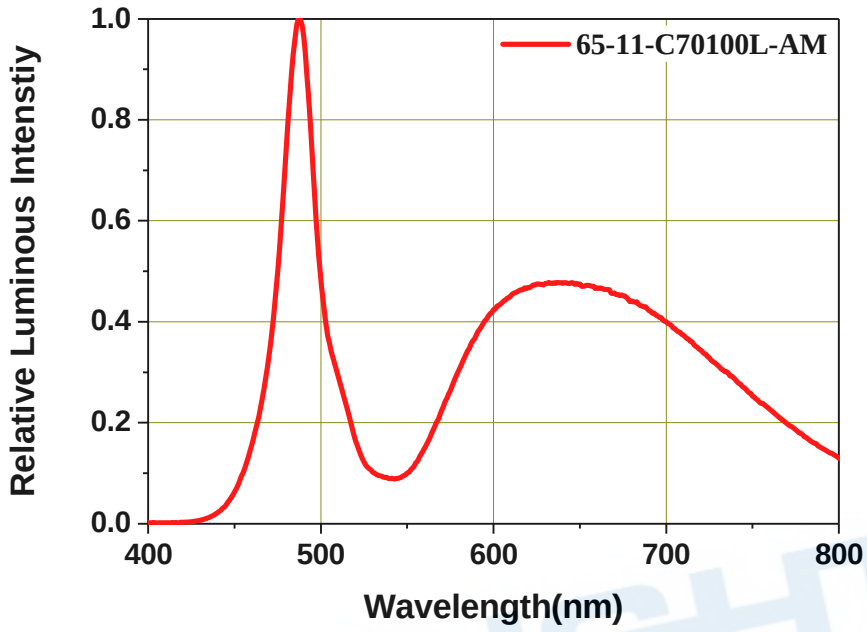

Typical Diagram Characteristics of Radiation

$\Phi_V / \Phi_V\,(0^\circ) = f(\varphi)$

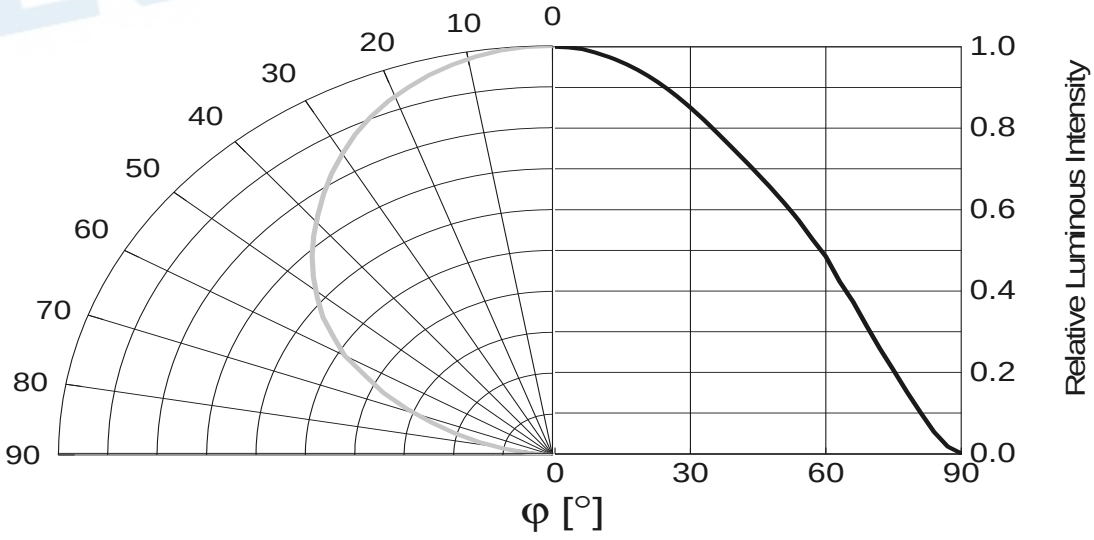

Notes:

1. φ is the off axis angle from lamp centerline where the luminous intensity is 1/2 of the peak value.
2. View angle tolerance is ± 5°.

Copyright © 2016, Everlight All Rights Reserved. Release Date: 13.Mar.2019 Issue No: DSE-0016543 Rev.5

Ver.:5 Release Date:03/18/2019 狀態:Approved(正式發行)

Forward Current vs. Forward Voltage
@ Ts = 25°C

$I_F = f(V_F)$

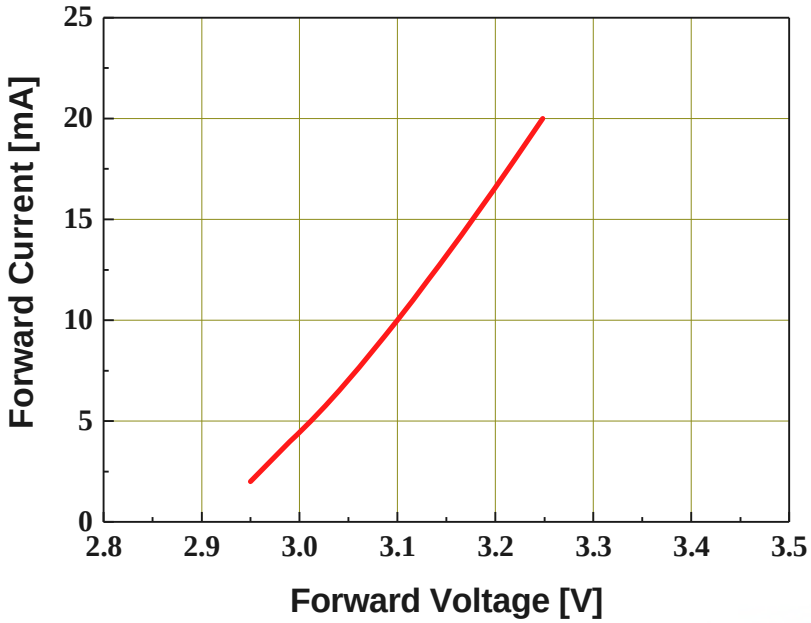

Relative Luminous Intensity vs. Forward Current
@ Ts = 25°C

$\Phi_V / \Phi_V(10mA) = f(I_F)$

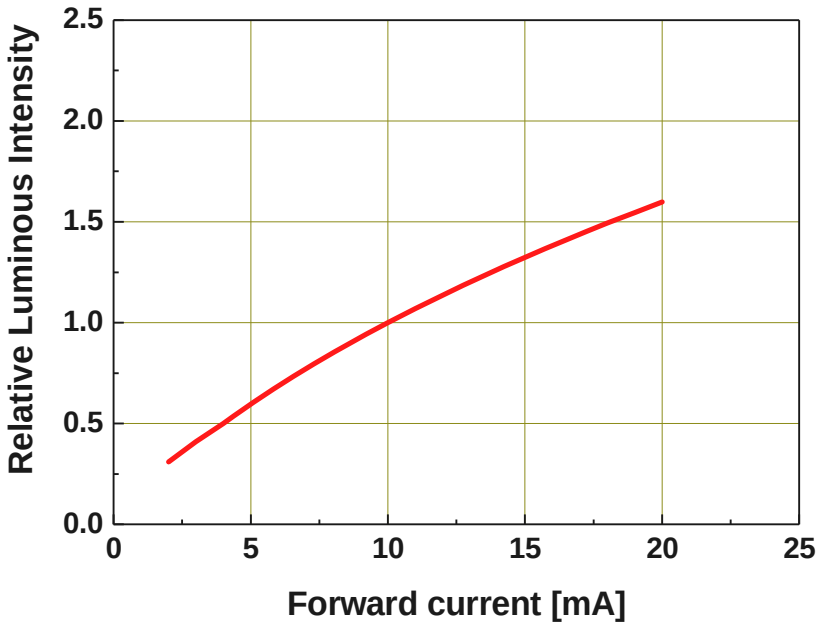

Copyright © 2016, Everlight All Rights Reserved. Release Date: 13.Mar.2019 Issue No: DSE-0016543 Rev.5
www.everlight.com
Ver.:5 Release Date:03/18/2019 狀態:Approved(正式發行)

Chromaticity Coordinates Shift vs. Forward Current

@ Ts = 25°C

$$\triangle CIE\ x, \triangle CIE\ y = f(I_F)$$

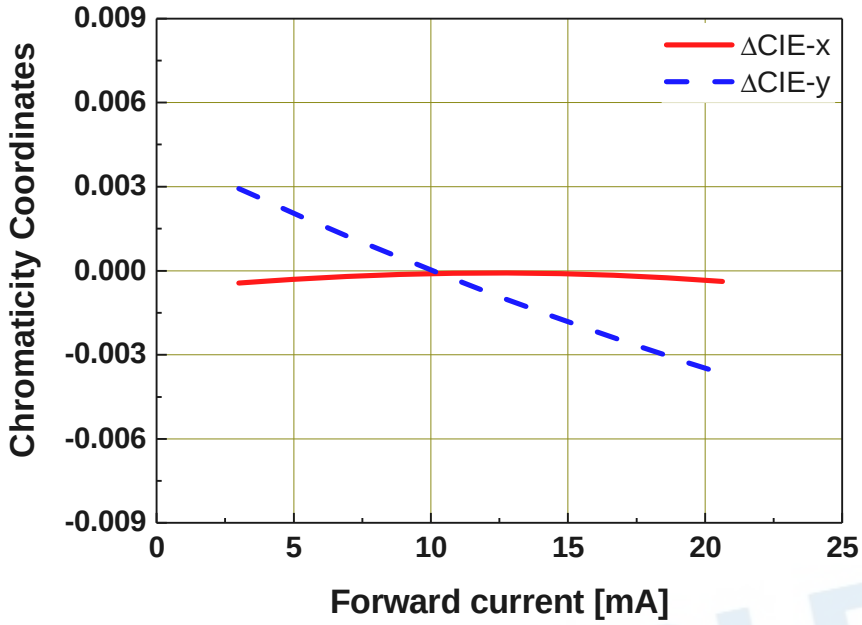

Relative Forward Voltage vs. Junction Temperature

@ I_F=10mA

$$\Delta V_F = V_F - V_F(25^\circ C) = f(T_j)$$

Copyright © 2016, Everlight All Rights Reserved. Release Date: 13.Mar.2019 Issue No: DSE-0016543 Rev.5

Ver.:5 Release Date:03/18/2019 狀態:Approved(正式發行)

Relative Luminous Intensity vs. Junction Temperature

@ I_F=10mA

$$\Phi_V / \Phi_V(25^\circ C) = f(T_j)$$

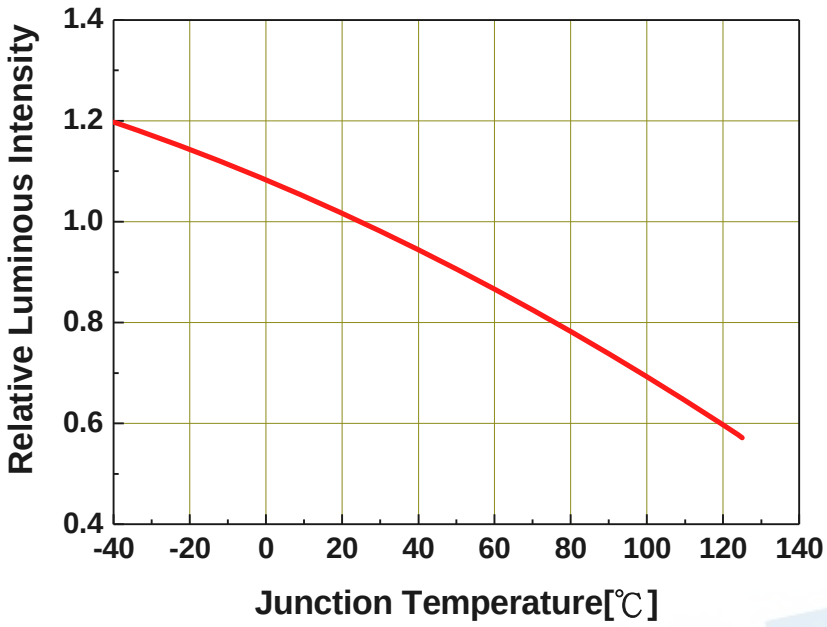

Chromaticity Coordinates Shift vs. Junction Temperature

@ I_F=10mA

$$\triangle CIE\ x, \triangle CIE\ y = f(T_j)$$

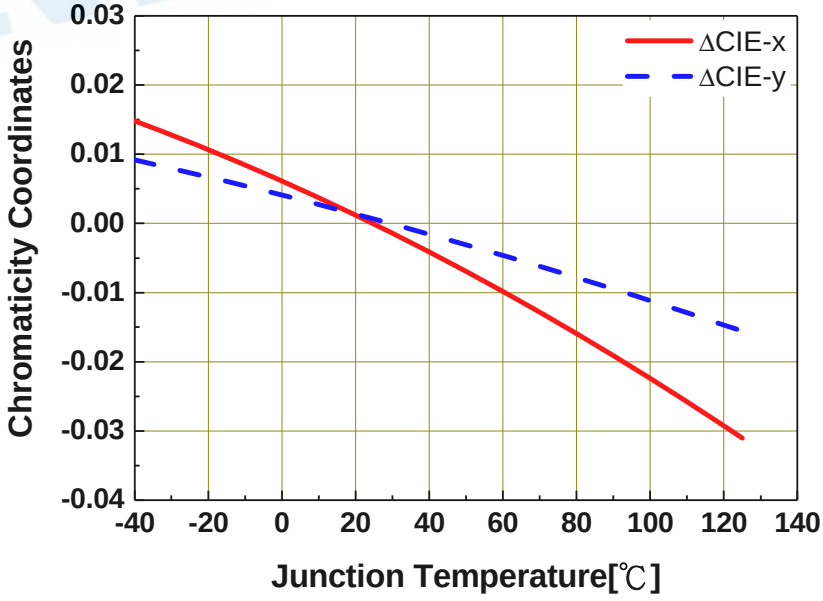

Copyright © 2016, Everlight All Rights Reserved. Release Date: 13.Mar.2019 Issue No: DSE-0016543 Rev.5
Ver.:5 Release Date:03/18/2019 狀態:Approved(正式發行)

Forward Current Derating Curve

$$I_F = f(T_S)$$

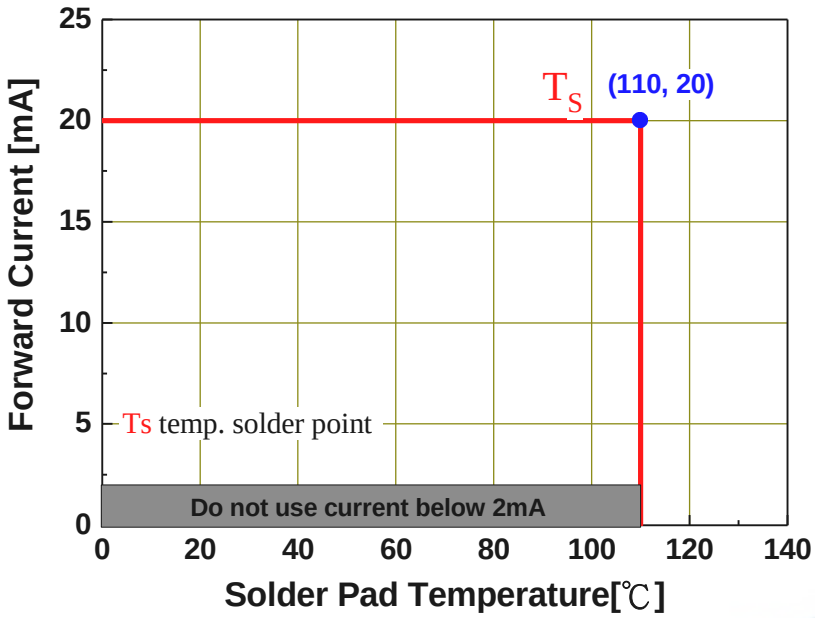

Permissible Pulse Handling Capability

D=Duty cycle , T_S = 25℃

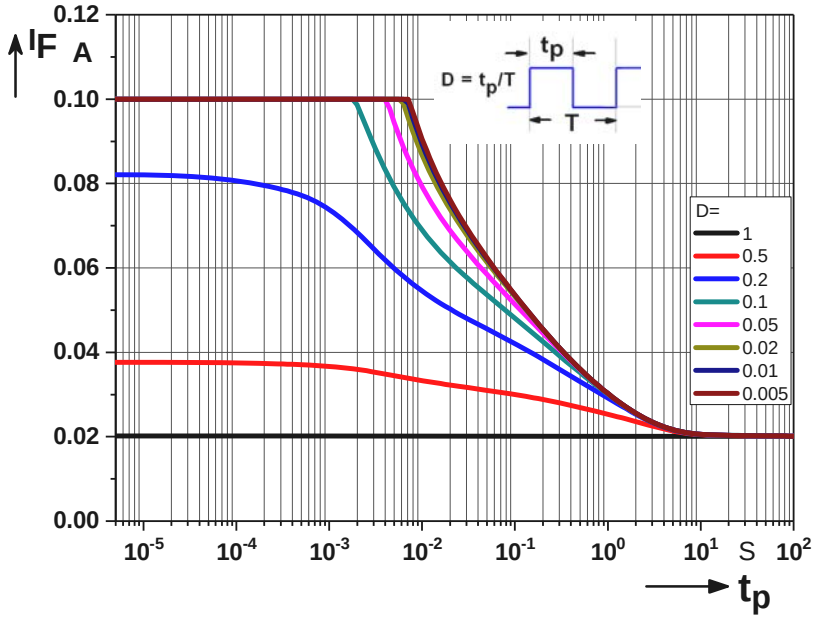

Copyright © 2016, Everlight All Rights Reserved. Release Date: 13.Mar.2019 Issue No: DSE-0016543 Rev.5
Ver.:5 Release Date:03/18/2019 狀態:Approved(正式發行)

Binning Information

Luminous Intensity Bins

Group Bin	Minimum Luminous Intensity (mcd)	Maximum Luminous Intensity (mcd)
L1	11.2	14
L2	14	18
M1	18	22.4
M2	22.4	28
N1	28	35.5
N2	35.5	45
P1	45	56
P2	56	71
Q1	71	90
Q2	90	112
R1	112	140
R2	140	180
S1	180	224
S2	224	280
T1	280	355
T2	355	450
U1	450	560
U2	560	710
V1	710	900
V2	900	1120
AA	1120	1400
AB	1400	1800
BA	1800	2240
BB	2240	2800
CA	2800	3550
CB	3550	4500
DA	4500	5600
DB	5600	7100
EA	7100	9000
EB	9000	11200
FA	11200	14000
FB	14000	18000
GA	18000	22400

Notes:

1. Luminous flux measurement tolerance: ±8%.
2. Highlighted Black Box is possible output bins.

Copyright © 2016, Everlight All Rights Reserved. Release Date: 13.Mar.2019 Issue No: DSE-0016543 Rev.5
Ver.:5 Release Date:03/18/2019 狀態:Approved(正式發行)

Standard White Color Bin Structure

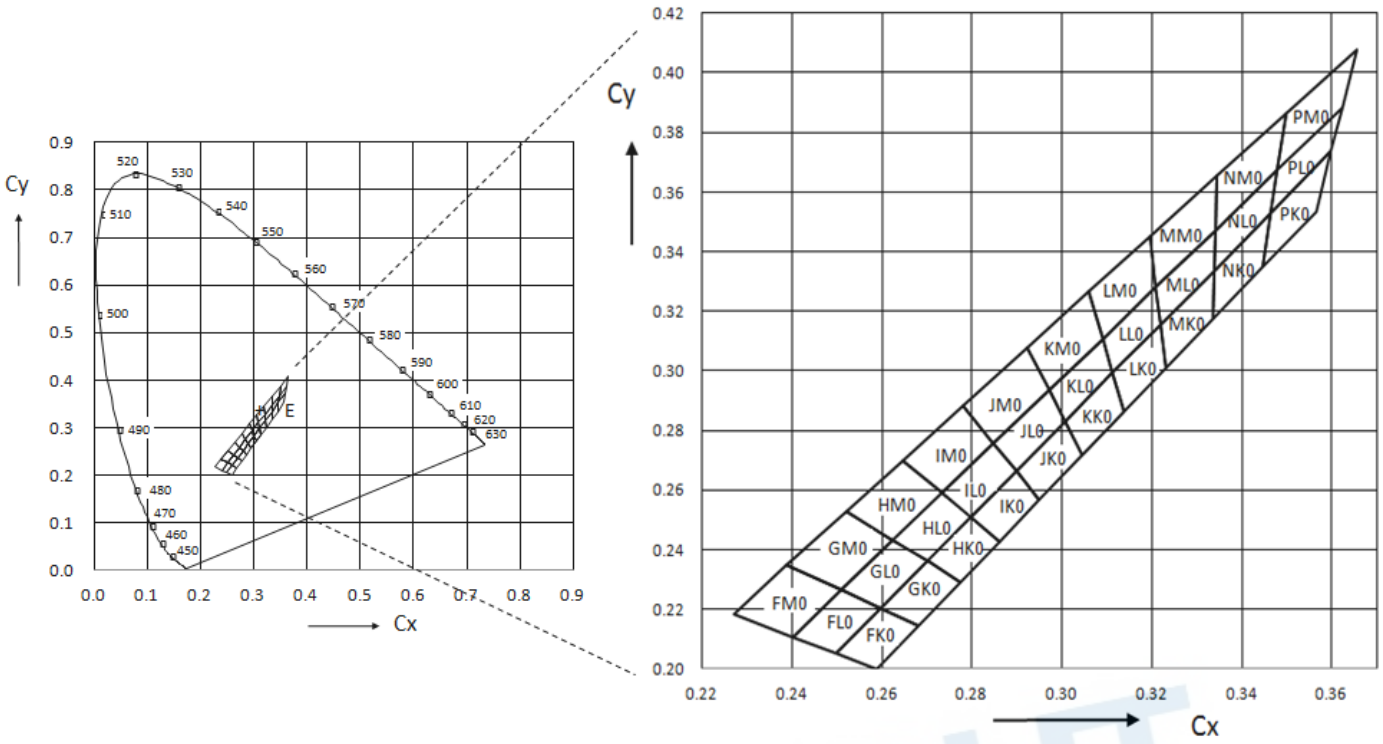

EVERLIGHT

Copyright © 2016, Everlight All Rights Reserved. Release Date: 13.Mar.2019 Issue No: DSE-0016543 Rev.5

Ver.:5 Release Date:03/18/2019 狀態:Approved(正式發行)

Cool White Color Bin Coordinates

Bin Code	CIE_x	CIE_y	Bin Code	CIE_x	CIE_y
FK0	0.2589	0.2000	NK0	0.3339	0.3336
	0.2498	0.2053		0.3335	0.3172
	0.2597	0.2204		0.3447	0.3347
	0.2682	0.2146		0.3465	0.3530
GK0	0.2682	0.2146	PK0	0.3465	0.3530
	0.2597	0.2204		0.3447	0.3347
	0.2700	0.2361		0.3567	0.3535
	0.2775	0.2292		0.3599	0.3735
HK0	0.2775	0.2292	FL0	0.2498	0.2053
	0.2700	0.2361		0.2402	0.2108
	0.2797	0.2509		0.2509	0.2264
	0.2861	0.2427		0.2597	0.2204
IK0	0.2861	0.2427	GL0	0.2597	0.2204
	0.2797	0.2509		0.2509	0.2264
	0.2898	0.2664		0.2624	0.2431
	0.2950	0.2568		0.2700	0.2361
JK0	0.2950	0.2568	HL0	0.2700	0.2361
	0.2898	0.2664		0.2624	0.2431
	0.3007	0.2830		0.2733	0.2590
	0.3045	0.2717		0.2797	0.2509
KK0	0.3045	0.2717	IL0	0.2797	0.2509
	0.3007	0.2830		0.2733	0.2590
	0.3113	0.2992		0.2848	0.2757
	0.3138	0.2862		0.2898	0.2664
LK0	0.3138	0.2862	JL0	0.2898	0.2664
	0.3113	0.2992		0.2848	0.2757
	0.3219	0.3154		0.2971	0.2935
	0.3231	0.3008		0.3007	0.2830
MK0	0.3339	0.3336	KL0	0.3007	0.2830
	0.3219	0.3154		0.2971	0.2935
	0.3231	0.3008		0.3090	0.3108
	0.3335	0.3172		0.3113	0.2992

Copyright © 2016, Everlight All Rights Reserved. Release Date: 13.Mar.2019 Issue No: DSE-0016543 Rev.5

Ver.:5 Release Date:03/18/2019 狀態:Approved(正式發行)

Cool White Color Bin Coordinates

Bin Code	CIE_x	CIE_y	Bin Code	CIE_x	CIE_y
LL0	0.3113	0.2992	IM0	0.2733	0.2590
	0.3090	0.3108		0.2646	0.2700
	0.3209	0.3281		0.2780	0.2883
	0.3219	0.3154		0.2848	0.2757
ML0	0.3341	0.3472	JM0	0.2848	0.2757
	0.3209	0.3281		0.2780	0.2883
	0.3219	0.3154		0.2922	0.3077
	0.3339	0.3336		0.2971	0.2935
NL0	0.3341	0.3472	KM0	0.2971	0.2935
	0.3339	0.3336		0.2922	0.3077
	0.3465	0.3530		0.3060	0.3266
	0.3479	0.3673		0.3090	0.3108
PL0	0.3479	0.3673	LM0	0.3090	0.3108
	0.3465	0.3530		0.3060	0.3266
	0.3599	0.3735		0.3196	0.3451
	0.3623	0.3882		0.3209	0.3281
FM0	0.2388	0.2348	MM0	0.3345	0.3654
	0.2269	0.2185		0.3196	0.3451
	0.2402	0.2108		0.3209	0.3281
	0.2509	0.2264		0.3341	0.3472
GM0	0.2509	0.2264	NM0	0.3345	0.3654
	0.2388	0.2348		0.3341	0.3472
	0.2520	0.2527		0.3479	0.3673
	0.2624	0.2431		0.3498	0.3863
HM0	0.2624	0.2431	PM0	0.3498	0.3863
	0.2520	0.2527		0.3479	0.3673
	0.2646	0.2700		0.3623	0.3882
	0.2733	0.2590		0.3655	0.4079

Copyright © 2016, Everlight All Rights Reserved. Release Date: 13.Mar.2019 Issue No: DSE-0016543 Rev.5

Ver.:5 Release Date:03/18/2019 狀態:Approved(正式發行)

Forward Voltage Bins

Bin code	Min Forward Voltage [V]	Max Forward Voltage [V]
1012	1.00	1.25
1215	1.25	1.50
1517	1.50	1.75
1720	1.75	2.00
2022	2.00	2.25
2225	2.25	2.50
2527	2.50	2.75
2730	2.75	3.00
3032	3.00	3.25
3235	3.25	3.50
3537	3.50	3.75
3740	3.75	4.00
4042	4.00	4.25
4245	4.25	4.50
4547	4.50	4.75
4750	4.75	5.00
5052	5.00	5.25
5255	5.25	5.50
5557	5.50	5.75
5760	5.75	6.00
6062	6.00	6.25
6265	6.25	6.50
6567	6.50	6.75
6770	6.75	7.00

Notes:

1. Forward voltage measurement tolerance: ±0.05V.
2. Forward voltage bins are defined at I_F = 10mA operation.

Copyright © 2016, Everlight All Rights Reserved. Release Date: 13.Mar.2019 Issue No: DSE-0016543 Rev.5

Ver.:5 Release Date:03/18/2019 狀態:Approved(正式發行)

4. Part Number

65-11-C70100L-AM

Part number is designated with below details.

65-11 = Product family name.

C = Color [1]

7 = CRI (0=N/A; >70%=7; >80%=8; >90%=9)

010 = Test current [mA]

0 = Lead Frame Type

H = Chip Code

AM = Automotive application

Note

[1] Color：

Symbol	Description
C	Cool White
N	Neutral White
W	Warm White
PA	Phosphor Converted Amber
PR	Phosphor Converted Red
UB	Blue
IB	Ice Blue
SB	Sky Blue
UP	Purple
UG	Green
UY	Yellow
UYG	Brilliant Yellow Green
UPG	Pale Green
UA	Amber
UR	Red
SR	Super Red
RGB	RGB-Color
PYG	Phosphor Converted Yellow Green

Copyright © 2016, Everlight All Rights Reserved. Release Date: 13.Mar.2019 Issue No: DSE-0016543 Rev.5

Ver.:5 Release Date:03/18/2019 狀態:Approved(正式發行)

6. Ordering Information

65-11-C70100L-ABCDEFGHJKLMNO-PQ-AM

Part Number of the 65-11	Order Code
65-11-C70100L-AM	65-11-C70100L-ABCDEFGHJKLMNO-PQ-AM

Order code contains information with below details：

ABCDEF = min/max wavelength or CCT

GHJK = min./max. luminous flux in [lm] or luminous intensity in [mcd]

LMNO = min./max. forward voltage

PQ = internal code

AM = Automotive Application

Copyright © 2016, Everlight All Rights Reserved. Release Date: 13.Mar.2019 Issue No: DSE-0016543 Rev.5

Ver.:5 Release Date:03/18/2019 狀態:Approved(正式發行)

7. Mechanical Dimension

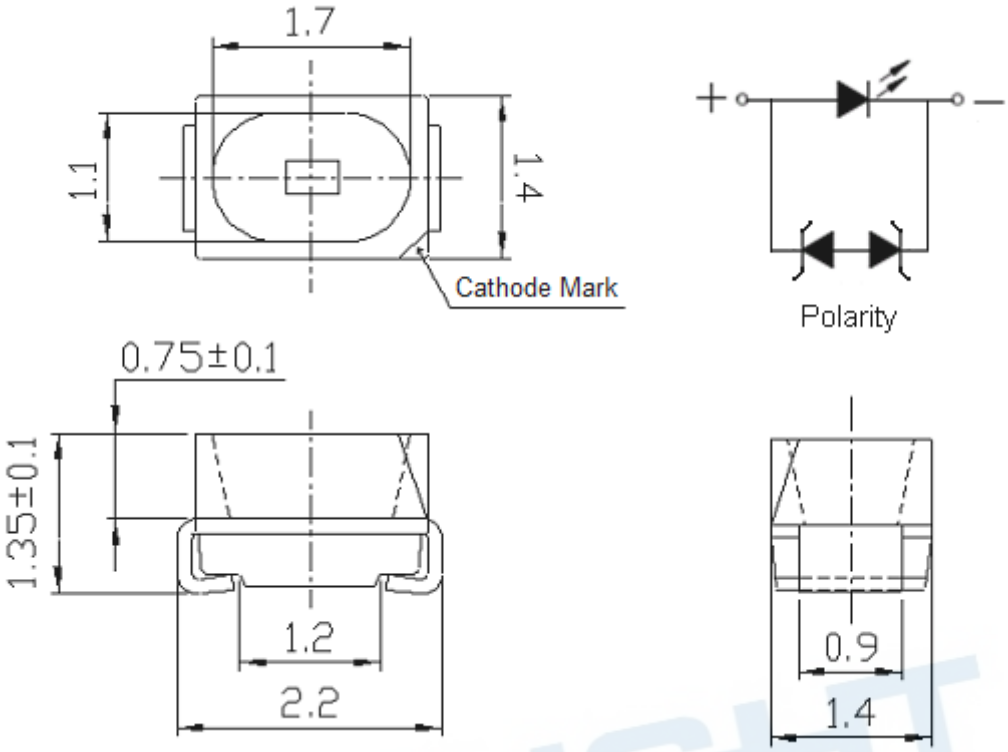

Notes:

1. Dimensions are in millimeters.
2. Tolerances unless mentioned are ± 0.1mm.

Copyright © 2016, Everlight All Rights Reserved. Release Date: 13.Mar.2019 Issue No: DSE-0016543 Rev.5

Ver.:5 Release Date:03/18/2019 狀態:Approved(正式發行)

8. Recommended Soldering Pad

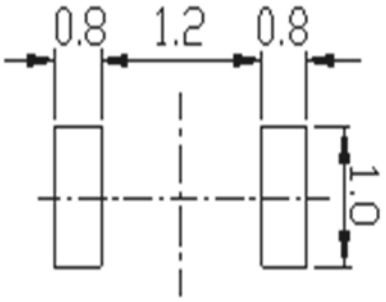

9. Reflow Soldering Profile

Soldering Condition (Reference: IPC/JEDEC J-STD-020D)

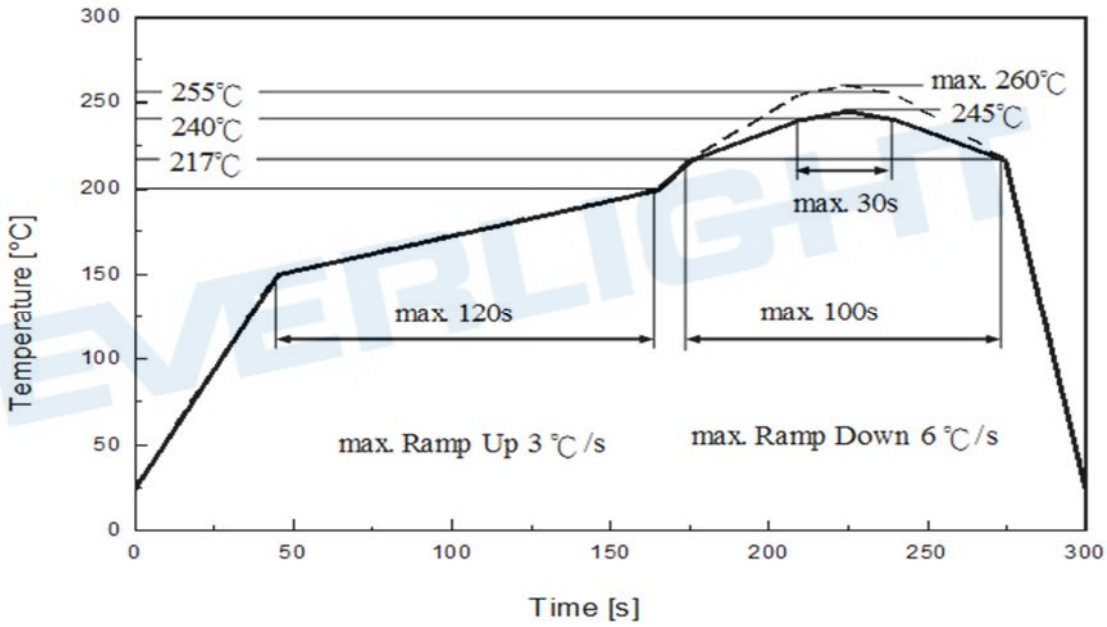

Profile Feature	Pb-Free Assembly Recommendation	Unit
Ramp-up rate to preheat 25 °C to 150 °C	3	°C /sec
Time of soaking zone 150 °C to 200 °C	120	sec
Ramp-up rate to peak	3	°C /sec
Liquidus temperature	217	°C
Time above liquidus temperature	100	sec
Peak temperature (max.)	260	°C
Time within 5°C of the specified peak temperature	30	sec
Ramp-down Rate (max.)	6	°C /sec

Copyright © 2016, Everlight All Rights Reserved. Release Date: 13.Mar.2019 Issue No: DSE-0016543 Rev.5
Ver.:5 Release Date:03/18/2019 狀態:Approved(正式發行)

10. Packaging Information

• Product Labeling



- CPN：Customer's Product Number
- P/N ： Everlight Part Number
- QTY：Packing Quantity
- CAT：Luminous Flux (Brightness) Bin
- HUE：Color Bin
- REF：Forward Voltage Bin
- LOT No：Lot Number

• Packing: Loaded Quantity 2000 pcs Per Reel

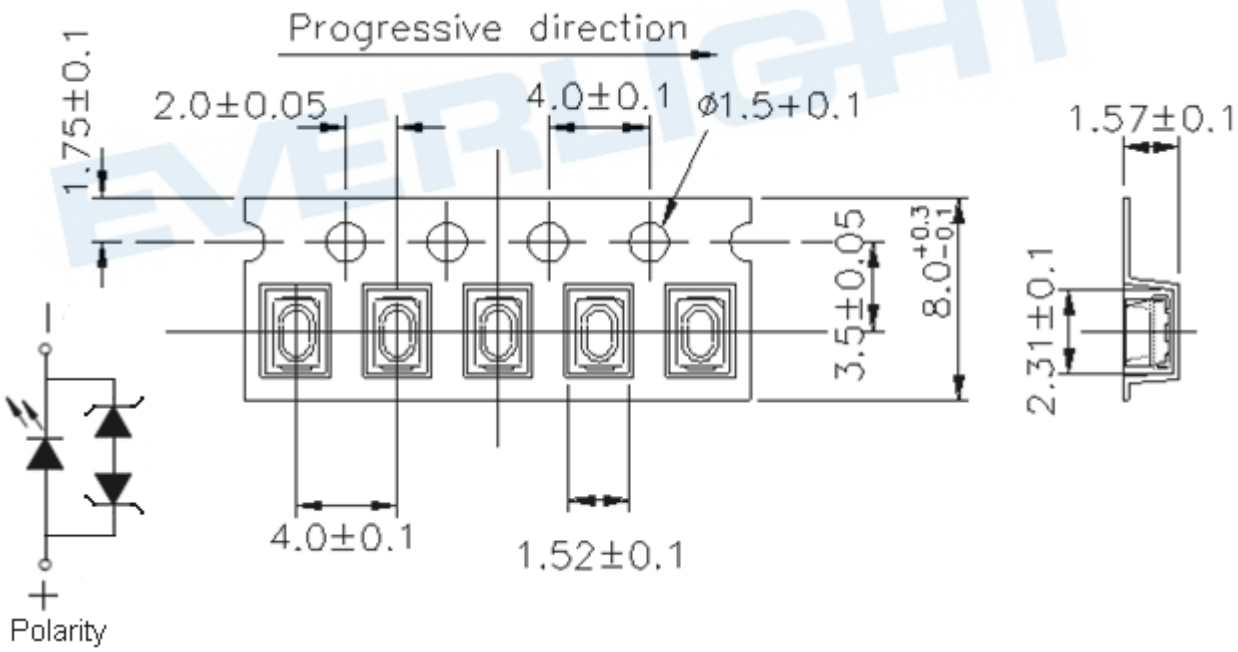

Notes:

1. Dimensions are in millimeters.

Copyright © 2016, Everlight All Rights Reserved. Release Date: 13.Mar.2019 Issue No: DSE-0016543 Rev.5

Ver.:5 Release Date:03/18/2019 狀態:Approved(正式發行)

Reel Dimensions

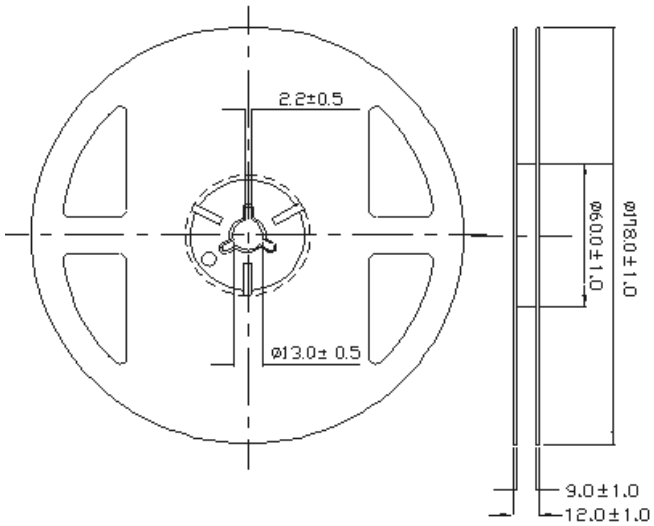

Notes:

1. Dimensions are in millimeters.

Moisture Resistant Packing Process

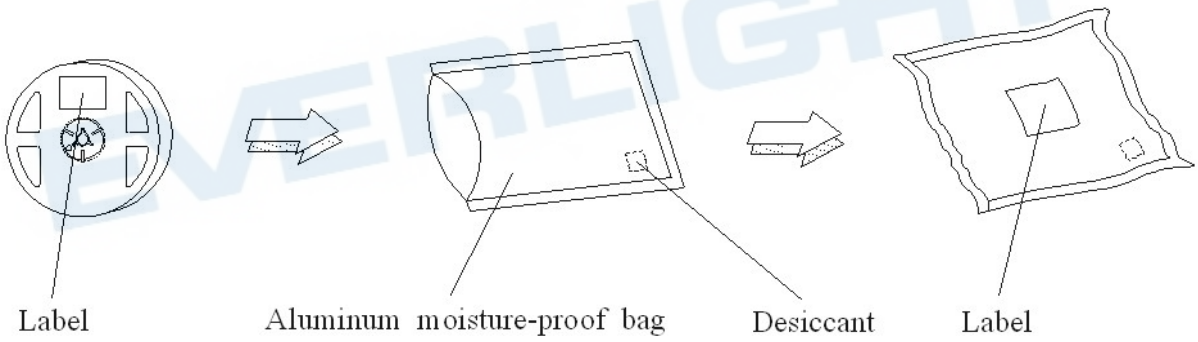

Copyright © 2016, Everlight All Rights Reserved. Release Date: 13.Mar.2019 Issue No: DSE-0016543 Rev.5
Ver.:5 Release Date:03/18/2019 狀態:Approved(正式發行)

11. Precaution for Use

1. Over-current-proof
   Customer must apply resistors for protection; otherwise slight voltage shift will cause big current change (burn out will happen).

2. Assemblies
   Do not stack assemblies containing LEDs to prevent damage to the optical surface of LEDs. Forces applied to the optical surface may result in the surface being damaged.

3. Soldering Condition
   3.1 When soldering, do not put stress on the LEDs during heating.
   3.2 After soldering, do not warp the circuit board.

4. Soldering Iron
   Each terminal is to go to the tip of soldering iron temperature less than 350℃ for 3 seconds within once in less than the soldering iron capacity 25W. Leave two seconds and more intervals, and do soldering of each terminal. Be careful because the damage of the product is often started at the time of the hand solder.

5. Repairing
   Repair should not be done after the LEDs have been soldered. When repairing is unavoidable, a double-head soldering iron should be used (as below figure). It should be confirmed beforehand whether the characteristics of the LEDs will or will not be damaged by repairing.

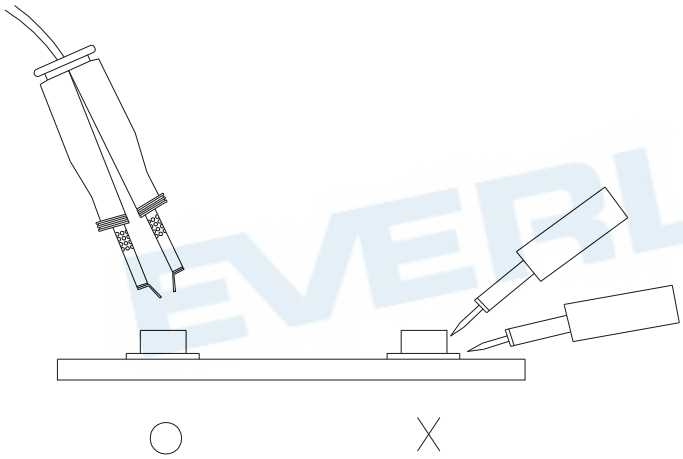

Copyright © 2016, Everlight All Rights Reserved. Release Date: 13.Mar.2019 Issue No: DSE-0016543 Rev.5

Ver.:5 Release Date:03/18/2019 狀態:Approved(正式發行)