EVERLIGHT
AUTOMOTIVE

DATASHEET

EL Mini TOP VIEW LED
65-11-C70200H-AM



Features

- Package：PLCC 2 package
- Color：Cool White
- Typ. Luminance Intensity：1800 mcd @ 20mA
- Viewing angle：120°
- ESD：8KV
- MSL：3
- Qualified AEC-Q102
- Corrosion Robustness Class B1
- The product itself will remain within RoHS compliant version.
- Compliance with EU REACH.
- Compliance Halogen Free .(Br <900 ppm ,Cl <900 ppm , Br+Cl < 1500 ppm)

Application

- Automotive Interior lighting.
- Switches.
- Cluster.

Contents

1. Characteristics 3
2. Absolute Maximum Ratings 4
3. Characteristics Graph 5
4. Binning Information 10
5. Part Number 14
6. Ordering Information 15
7. Mechanical Dimension 16
8. Recommended Soldering Pad 17
9. Reflow Soldering Profile 17
10. Packaging Information 18
11. Precaution for Use 20
12. Sulfur Test Criteria 21

Copyright © 2016, Everlight All Rights Reserved. Release Date:17.Jul.2025 Rev.1

1. Characteristics

Parameter		Symbol	Min.	Typ.	Max.	Unit	Condition
Forward Current		I_F	3	20	30	mA	---
Luminous Intensity		I_V	900	1800	3550	mcd	I_F=20mA
Forward Voltage		V_F	2.5	3.1	3.75	V	I_F=20mA
Viewing Angle		φ	---	120	---	deg	I_F=20mA
Color		CIE x	---	0.3	---	---	I_F=20mA
Color		CIE y	---	0.3	---	---	I_F=20mA
Thermal Resistance (Junction to Solder)	Real	$R_{th\ JS\ real}$	---	---	130	K/W	I_F=20mA
	Electrical	$R_{th\ JS\ el}$	---	---	100	K/W	I_F=20mA

Notes:

1. Luminous Flux measurement tolerance: ±8%.
2. The data of Luminous Flux measured at thermal pad=25°C.
3. Forward voltage measurement tolerance: ±0.05V.
4. Tolerance of Chromaticity Coordinates x,y：±0.005.

Copyright © 2016, Everlight All Rights Reserved. Release Date:17.Jul.2025 Rev.1

2. Absolute Maximum Ratings

Parameter	Symbol	Ratings	Unit
Power Dissipation	P_d	112	mW
Forward Current	I_F	30	mA
Surge Current (t<=10 μs; D=0.005; T_s=25 ℃)	I_{FM}	250	mA
Reverse Voltage	V_R	Not designed for reverse operation	V
Junction Temperature	T_J	125	°C
Operating Temperature	T_{opr}	-40 ~ +110	°C
Storage Temperature	T_{stg}	-40 ~ +110	°C
ESD Sensitivity (R=1.5kΩ, C= 100pF)	ESD_{HBM}	8	kV
Soldering Temperature	Reflow	260°C for 30sec	°C

Copyright © 2016, Everlight All Rights Reserved. Release Date:17.Jul.2025 Rev.1

3. Characteristics Graph

Wavelength Characteristics Relative Spectral Distribution

@ Ts = 25°C, I_F=20mA

$$\Phi_V/\Phi_V\,(Max.) = f(\lambda)$$

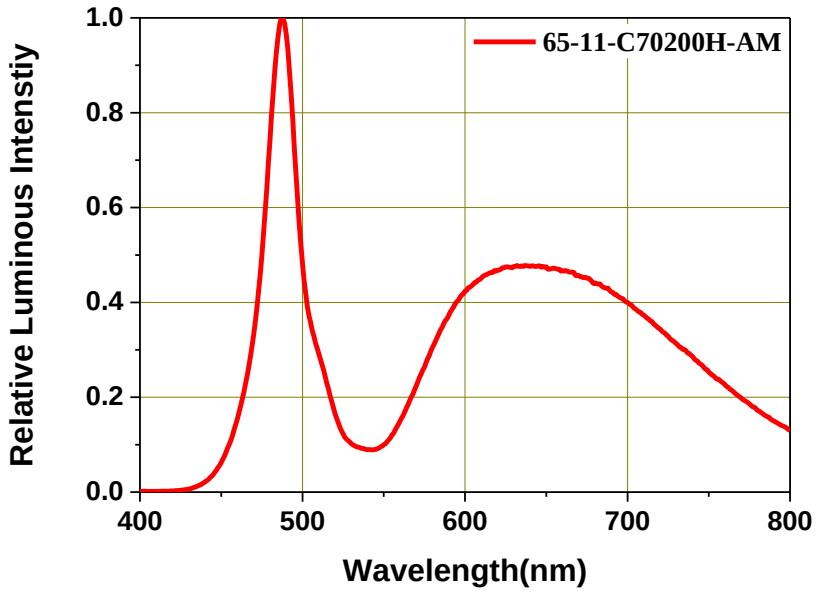

Typical Diagram Characteristics of Radiation

$$\Phi_V/\Phi_V\,(0^\circ) = f(\varphi)$$

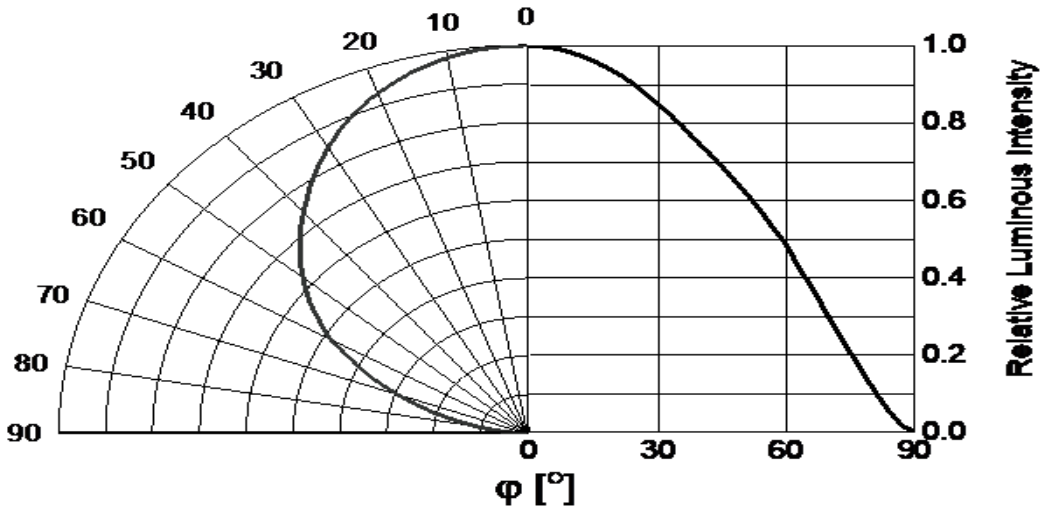

Notes:

1. φ is the off axis angle from lamp centerline where the luminous intensity is 1/2 of the peak value.
2. View angle tolerance is ± 5°.

Copyright © 2016, Everlight All Rights Reserved. Release Date:17.Jul.2025 Rev.1

Forward Current vs. Forward Voltage
@ Ts = 25°C

$$I_F = f(V_F)$$

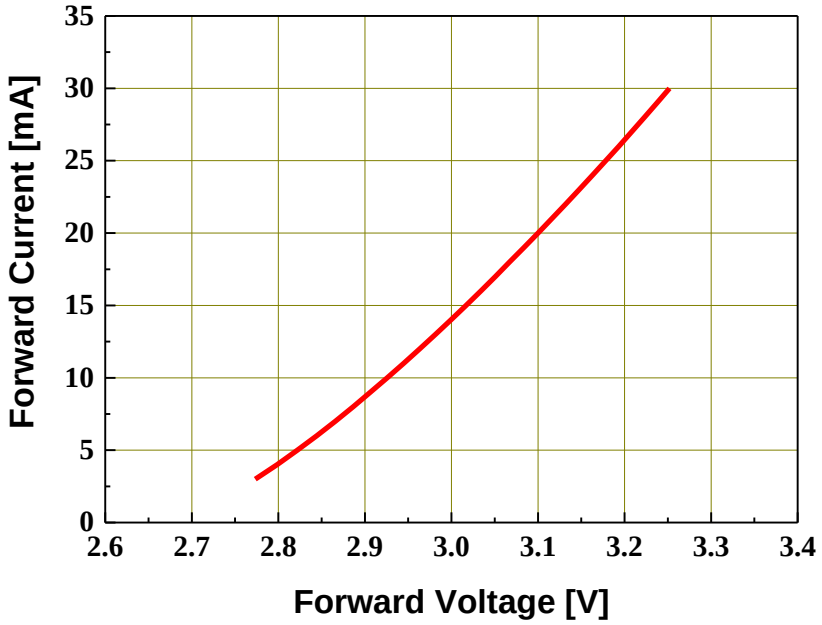

Relative Luminous Intensity vs. Forward Current
@ Ts = 25°C

$$\Phi_V / \Phi_V(20mA) = f(I_F)$$

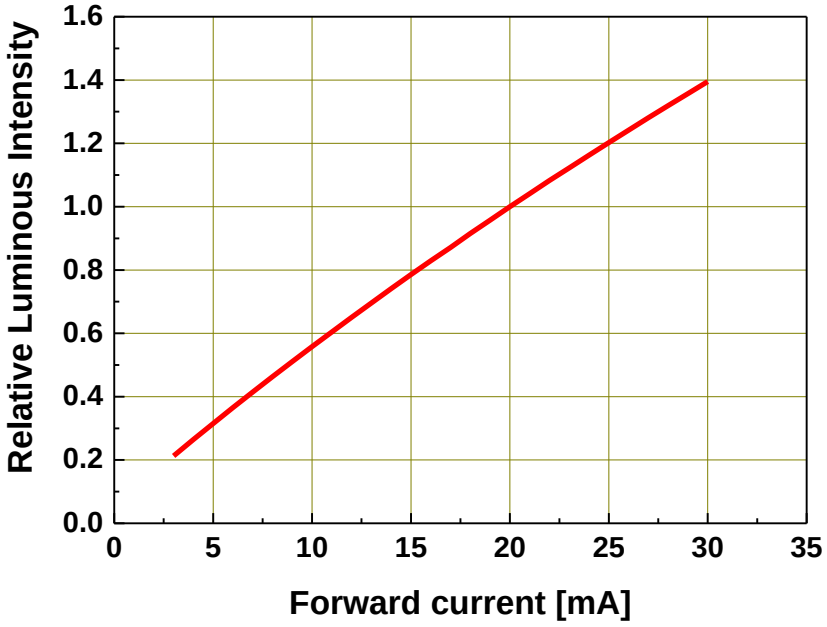

Copyright © 2016, Everlight All Rights Reserved. Release Date:17.Jul.2025 Rev.1

Chromaticity Coordinates Shift vs. Forward Current
@ Ts = 25°C

$$\triangle CIE\ x, \triangle CIE\ y = f(I_F)$$

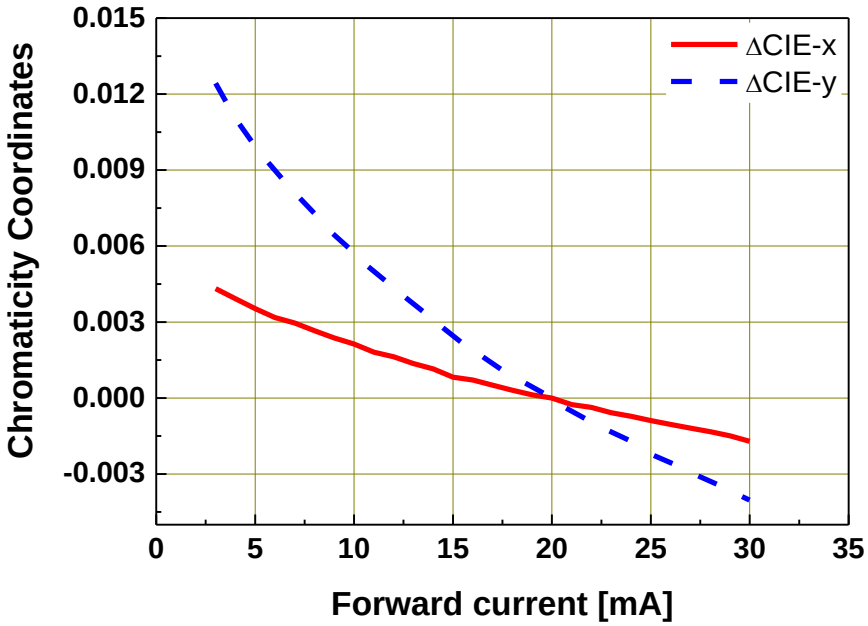

Relative Forward Voltage vs. Junction Temperature
@ I_F=20mA

$$\Delta V_F = V_F - V_F(25^\circ C) = f(T_j)$$

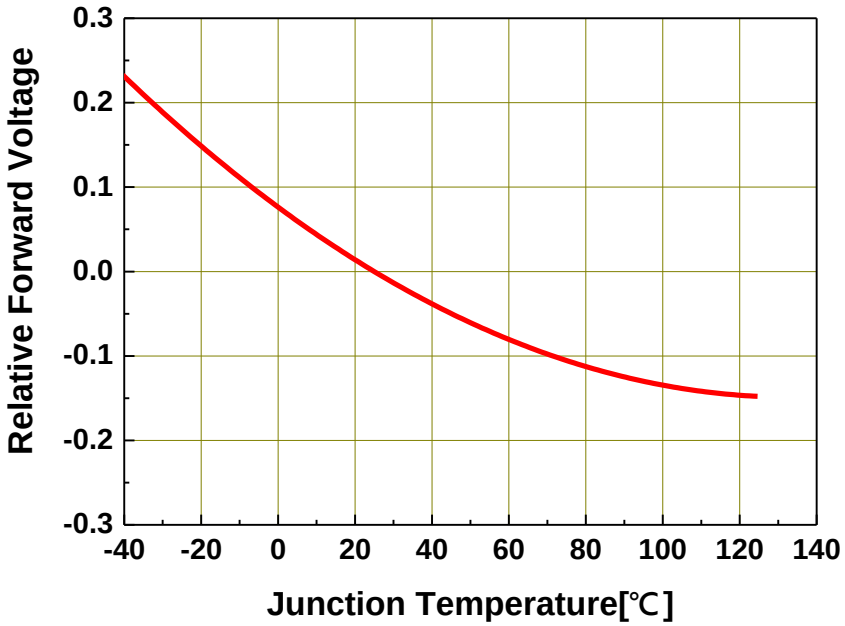

Copyright © 2016, Everlight All Rights Reserved. Release Date:17.Jul.2025 Rev.1

Relative Luminous Intensity vs. Junction Temperature
@ I_F=20mA

$$\Phi_V / \Phi_V(25^\circ C) = f(T_j)$$

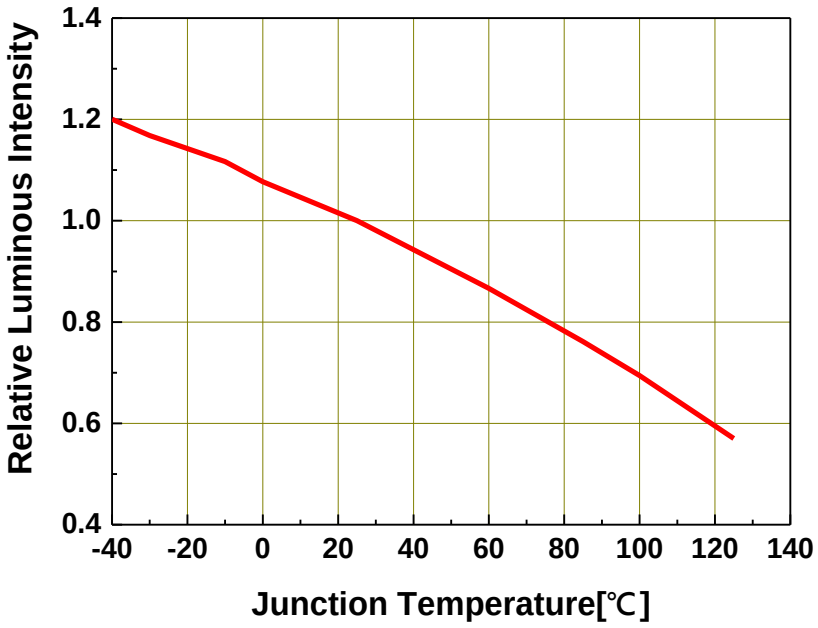

Chromaticity Coordinates Shift vs. Junction Temperature
@ I_F=20mA

$$\triangle CIE\ x, \triangle CIE\ y = f(T_j)$$

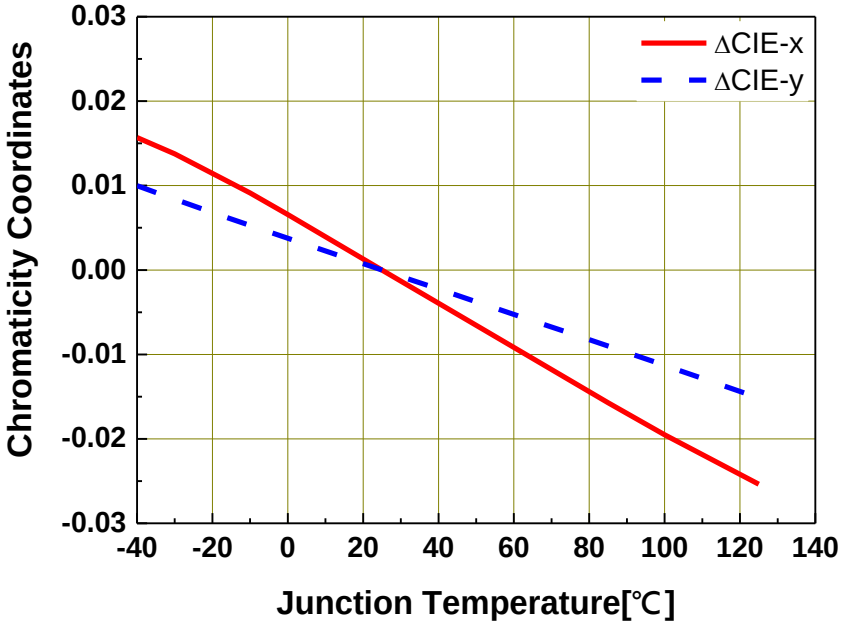

Copyright © 2016, Everlight All Rights Reserved. Release Date:17.Jul.2025 Rev.1

Forward Current Derating Curve

$$I_F = f(T_S)$$

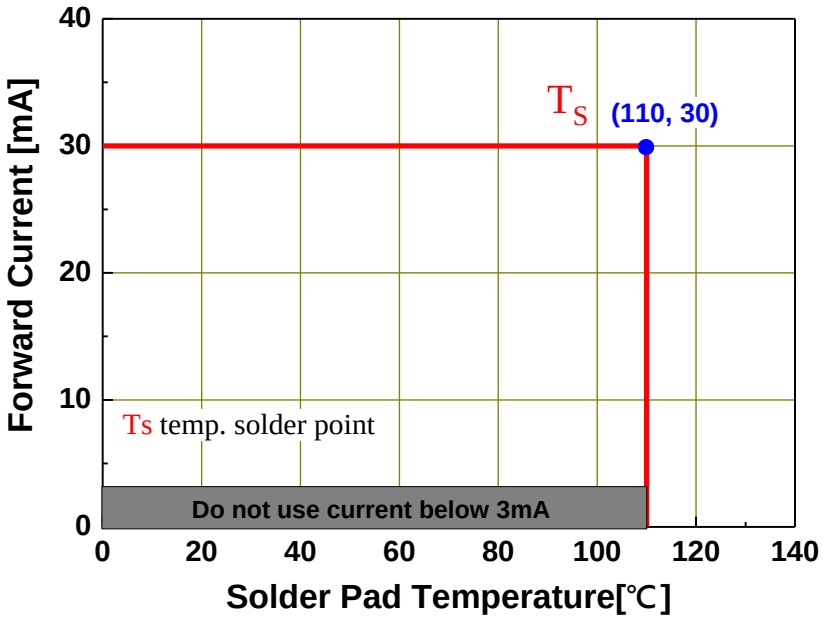

Permissible Pulse Handling Capability

D=Duty cycle , T_s = 25℃

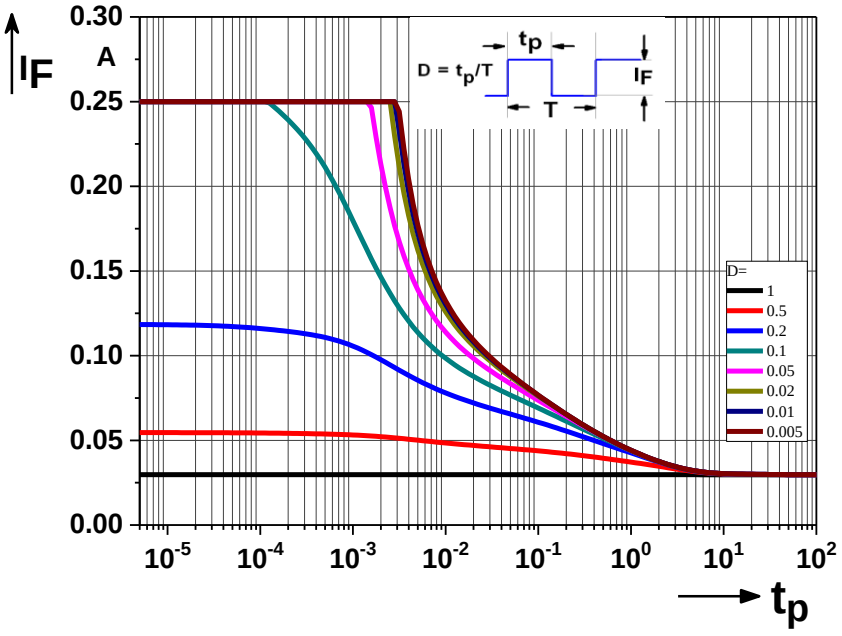

Copyright © 2016, Everlight All Rights Reserved. Release Date:17.Jul.2025 Rev.1

4. Binning Information

Luminous Intensity Bins

Group Bin	Minimum Luminous Intensity (mcd)	Maximum Luminous Intensity (mcd)
L1	11.2	14
L2	14	18
M1	18	22.4
M2	22.4	28
N1	28	35.5
N2	35.5	45
P1	45	56
P2	56	71
Q1	71	90
Q2	90	112
R1	112	140
R2	140	180
S1	180	224
S2	224	280
T1	280	355
T2	355	450
U1	450	560
U2	560	710
V1	710	900
V2	900	1120
AA	1120	1400
AB	1400	1800
BA	1800	2240
BB	2240	2800
CA	2800	3550
CB	3550	4500
DA	4500	5600
DB	5600	7100
EA	7100	9000
EB	9000	11200
FA	11200	14000
FB	14000	18000
GA	18000	22400

Notes:

1. Luminous flux measurement tolerance: ±8%.
2. Highlighted Black Box is possible output bins.

Copyright © 2016, Everlight All Rights Reserved. Release Date:17.Jul.2025 Rev.1

Standard Cool White Color Bin Structure

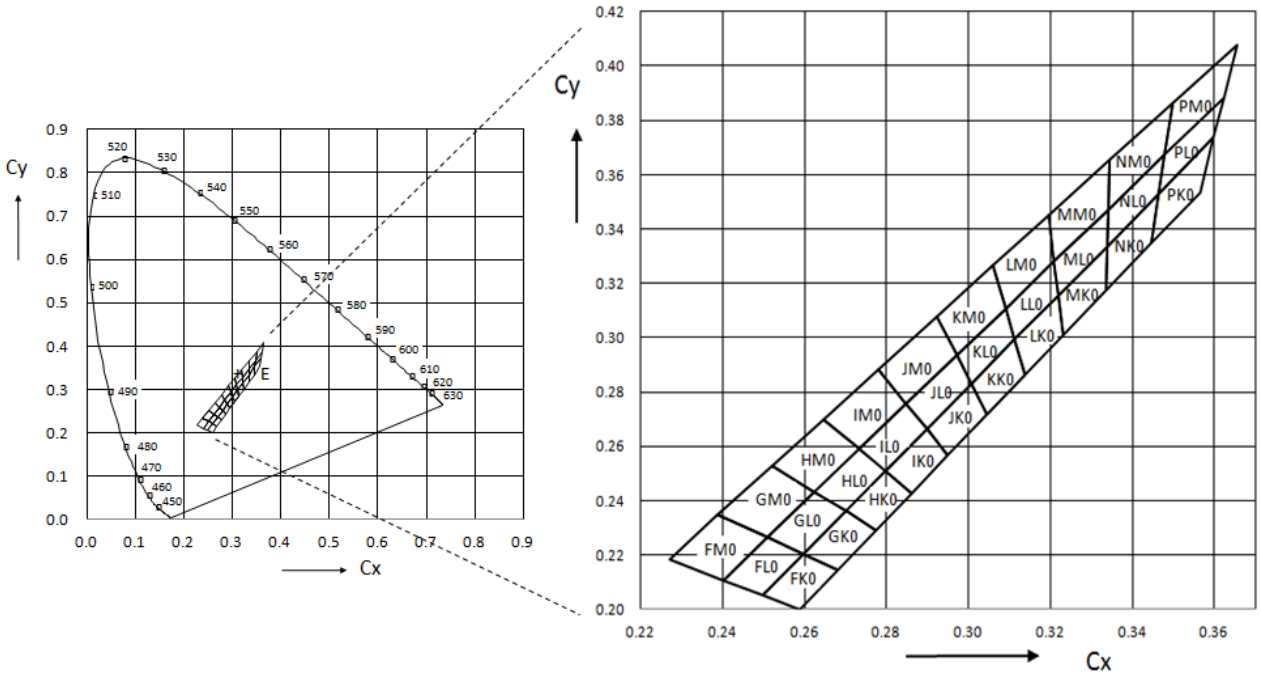

Cool White Color Bin Coordinates

Bin Code	CIE_x	CIE_y	Bin Code	CIE_x	CIE_y
PK0	0.3465	0.3530	HK0	0.2775	0.2292
	0.3447	0.3347		0.2700	0.2361
	0.3567	0.3535		0.2797	0.2509
	0.3599	0.3735		0.2861	0.2427
NK0	0.3339	0.3336	GK0	0.2682	0.2146
	0.3335	0.3172		0.2597	0.2204
	0.3447	0.3347		0.2700	0.2361
	0.3465	0.3530		0.2775	0.2292
MK0	0.3339	0.3336	FK0	0.2589	0.2000
	0.3219	0.3154		0.2498	0.2053
	0.3231	0.3008		0.2597	0.2204
	0.3335	0.3172		0.2682	0.2146
LK0	0.3138	0.2862	PL0	0.3479	0.3673
	0.3113	0.2992		0.3465	0.3530
	0.3219	0.3154		0.3599	0.3735
	0.3231	0.3008		0.3623	0.3882
KK0	0.3045	0.2717	NL0	0.3341	0.3472
	0.3007	0.2830		0.3339	0.3336
	0.3113	0.2992		0.3465	0.3530
	0.3138	0.2862		0.3479	0.3673
JK0	0.2950	0.2568	ML0	0.3341	0.3472
	0.2898	0.2664		0.3209	0.3281
	0.3007	0.2830		0.3219	0.3154
	0.3045	0.2717		0.3339	0.3336
IK0	0.2861	0.2427	LL0	0.3113	0.2992
	0.2797	0.2509		0.3090	0.3108
	0.2898	0.2664		0.3209	0.3281
	0.2950	0.2568		0.3219	0.3154

Copyright © 2016, Everlight All Rights Reserved. Release Date:17.Jul.2025 Rev.1

Cool White Color Bin Coordinates

Bin Code	CIE_x	CIE_y	Bin Code	CIE_x	CIE_y
KL0	0.3007	0.2830	MM0	0.3345	0.3654
	0.2971	0.2935		0.3196	0.3451
	0.3090	0.3108		0.3209	0.3281
	0.3113	0.2992		0.3341	0.3472
JL0	0.2898	0.2664	LM0	0.3090	0.3108
	0.2848	0.2757		0.3060	0.3266
	0.2971	0.2935		0.3196	0.3451
	0.3007	0.2830		0.3209	0.3281
IL0	0.2797	0.2509	KM0	0.2971	0.2935
	0.2733	0.2590		0.2922	0.3077
	0.2848	0.2757		0.3060	0.3266
	0.2898	0.2664		0.3090	0.3108
HL0	0.2700	0.2361	JM0	0.2848	0.2757
	0.2624	0.2431		0.2780	0.2883
	0.2733	0.2590		0.2922	0.3077
	0.2797	0.2509		0.2971	0.2935
GL0	0.2597	0.2204	IM0	0.2733	0.2590
	0.2509	0.2264		0.2646	0.2700
	0.2624	0.2431		0.2780	0.2883
	0.2700	0.2361		0.2848	0.2757
FL0	0.2498	0.2053	HM0	0.2624	0.2431
	0.2402	0.2108		0.2520	0.2527
	0.2509	0.2264		0.2646	0.2700
	0.2597	0.2204		0.2733	0.2590
PM0	0.3498	0.3863	GM0	0.2509	0.2264
	0.3479	0.3673		0.2388	0.2348
	0.3623	0.3882		0.2520	0.2527
	0.3655	0.4079		0.2624	0.2431
NM0	0.3345	0.3654	FM0	0.2269	0.2185
	0.3341	0.3472		0.2388	0.2348
	0.3479	0.3673		0.2509	0.2264
	0.3498	0.3863		0.2402	0.2108

Notes:

1. Tolerance of Chromaticity Coordinates x,y：±0.005.

Copyright © 2016, Everlight All Rights Reserved. Release Date:17.Jul.2025 Rev.1

Forward Voltage Bins

Bin code	Min Forward Voltage [V]	Max Forward Voltage [V]
1012	1.00	1.25
1215	1.25	1.50
1517	1.50	1.75
1720	1.75	2.00
2022	2.00	2.25
2225	2.25	2.50
2527	2.50	2.75
2730	2.75	3.00
3032	3.00	3.25
3235	3.25	3.50
3537	3.50	3.75
3740	3.75	4.00
4042	4.00	4.25
4245	4.25	4.50
4547	4.50	4.75
4750	4.75	5.00
5052	5.00	5.25
5255	5.25	5.50
5557	5.50	5.75
5760	5.75	6.00
6062	6.00	6.25
6265	6.25	6.50
6567	6.50	6.75
6770	6.75	7.00

Notes:

1. Forward voltage measurement tolerance: ±0.05V.
2. Forward voltage bins are defined at I_F = 20mA operation.
3. Highlighted Black Box is possible output bins.

Copyright © 2016, Everlight All Rights Reserved. Release Date:17.Jul.2025 Rev.1

5. Part Number

65-11-C70200H-AM

Part number is designated with below details.

65-11 = Product family name.

C = Color [1]

7 = CRI (0=N/A; >70%=7; >80%=8; >90%=9)

020 = Test current [mA]

0H = Internal Code

AM = Automotive application

Note

[1] Color：

Symbol	Description
B	Cool White
C	Cool White
N	Neutral White
W	Warm White
PA	Phosphor Converted Amber
PR	Phosphor Converted Red
UB	Blue
IB	Ice Blue
SB	Sky Blue
UP	Purple
UG	Green
UY	Yellow
UYG	Brilliant Yellow Green
UPG	Pale Green
UA	Amber
UR	Red
SR	Super Red
RGB	RGB-Color
PYG	Phosphor Converted Yellow Green

Copyright © 2016, Everlight All Rights Reserved. Release Date:17.Jul.2025 Rev.1

6. Ordering Information

65-11-C70200H-ABCDEFGHJKLMNO-PQ-AM

Part Number of the 65-11	Order Code
65-11-C70200H-AM	65-11-C70200H-ABCDEFGHJKLMNO-PQ-AM

Order code contains information with below details：

ABCDEF = min/max wavelength or CCT

GHJK = min./max. luminous flux in [lm] or luminous intensity in [mcd]

LMNO = min./max. forward voltage

PQ = internal code

AM = Automotive Application

Copyright © 2016, Everlight All Rights Reserved. Release Date:17.Jul.2025 Rev.1

7. Mechanical Dimension

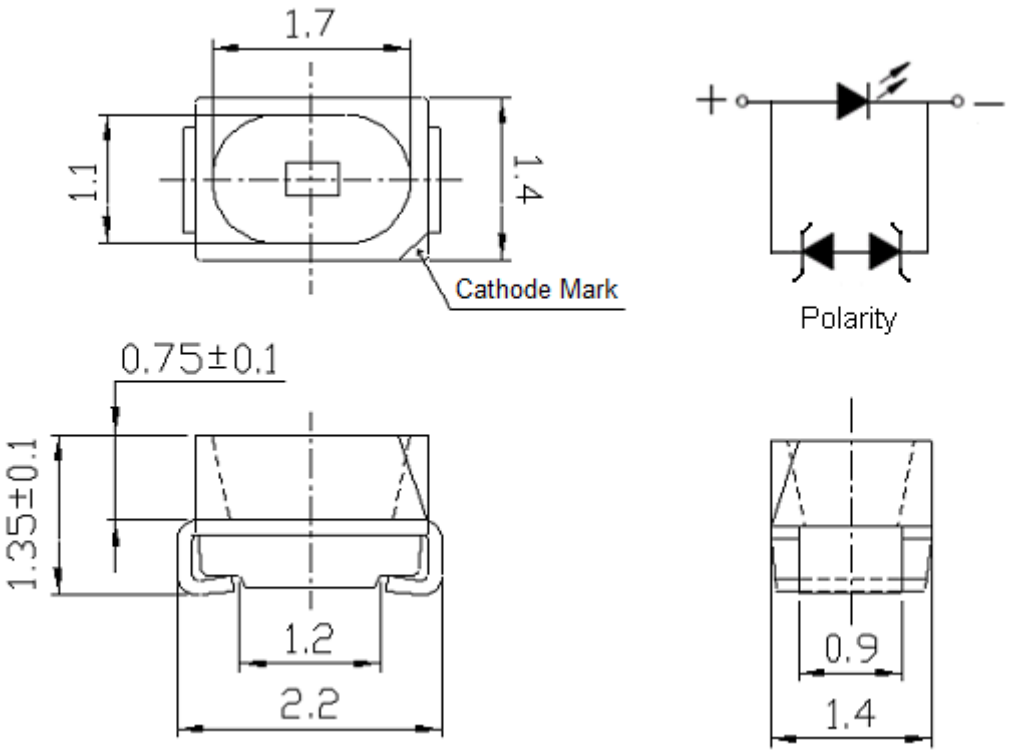

Notes:

1. Dimensions are in millimeters.
2. Tolerances unless mentioned are ± 0.1mm.

Copyright © 2016, Everlight All Rights Reserved. Release Date:17.Jul.2025 Rev.1

8. Recommended Soldering Pad

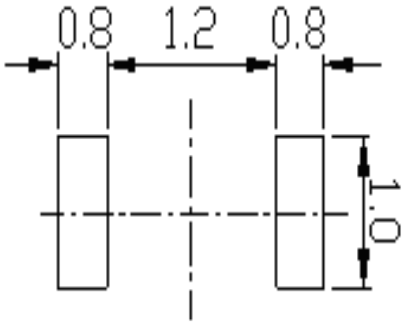

9. Reflow Soldering Profile

Soldering Condition (Reference: IPC/JEDEC J-STD-020D)

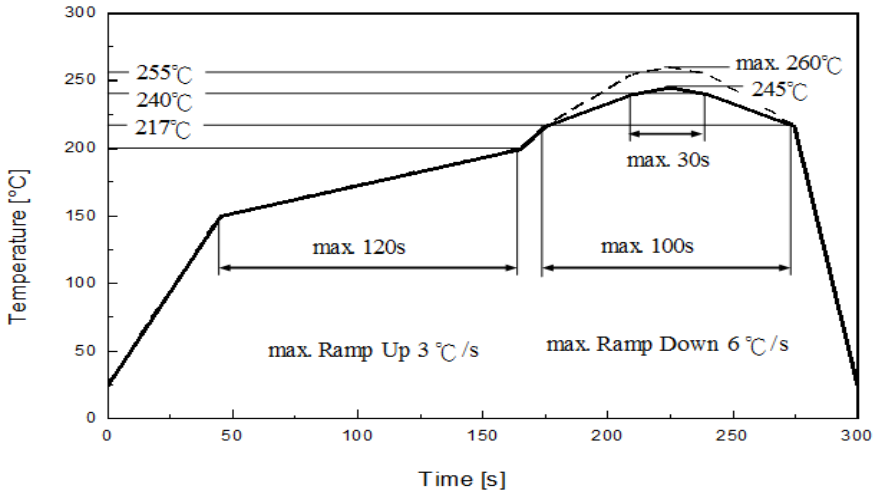

Profile Feature	Pb-Free Assembly Recommendation	Unit
Ramp-up rate to preheat 25 °C to 150 °C	3	°C /sec
Time of soaking zone 150 °C to 200 °C	120	sec
Ramp-up rate to peak	3	°C /sec
Liquidus temperature	217	°C
Time above liquidus temperature	100	sec
Peak temperature (max.)	260	°C
Time within 5°C of the specified peak temperature	30	sec
Ramp-down Rate (max.)	6	°C /sec

Copyright © 2016, Everlight All Rights Reserved. Release Date:17.Jul.2025 Rev.1

10. Packaging Information

● Product Labeling

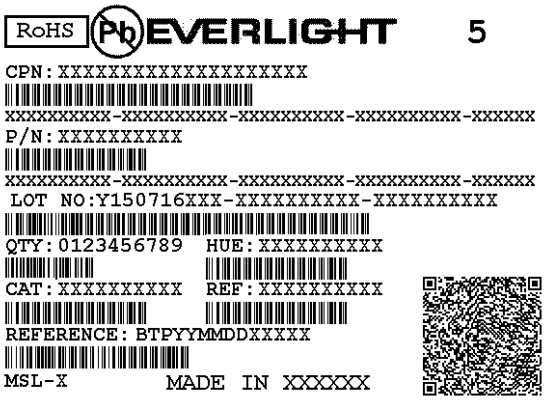

- CPN：Customer's Product Number
- P/N：Everlight Part Number
- QTY：Packing Quantity
- CAT：Luminous Flux (Brightness) Bin
- HUE：Color Bin
- REF：Forward Voltage Bin
- LOT No：Lot Number

● Packing: Loaded Quantity 2000 pcs Per Reel

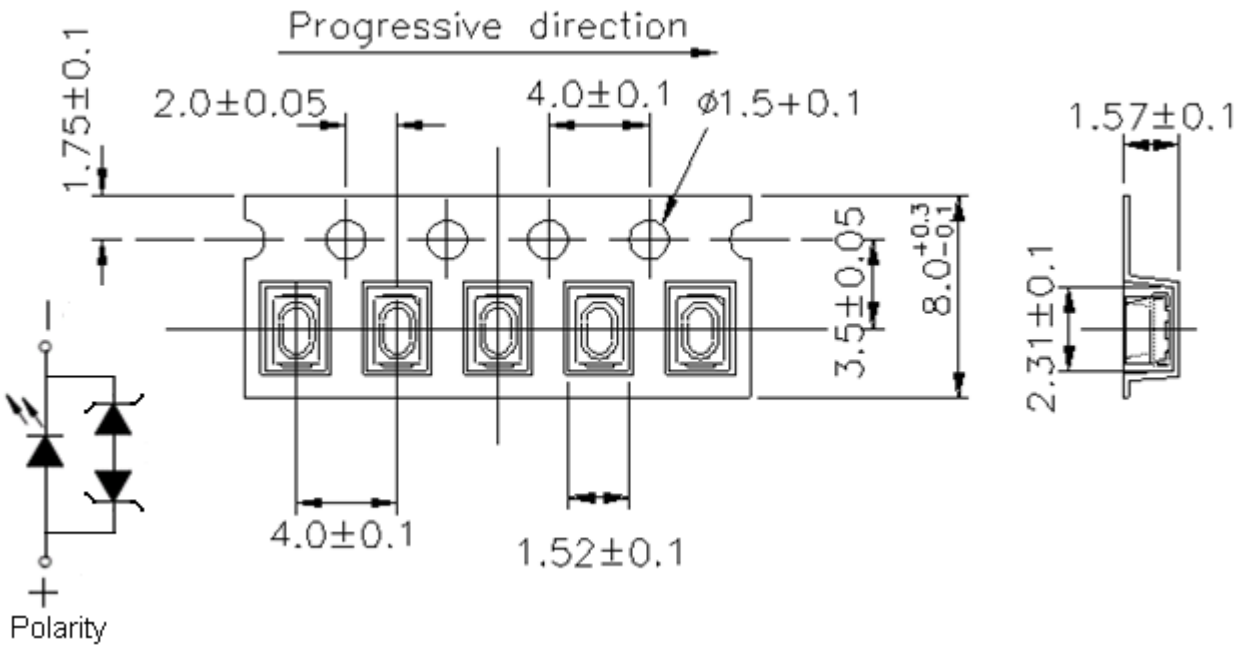

Notes:

1. Dimensions are in millimeters.

Copyright © 2016, Everlight All Rights Reserved. Release Date:17.Jul.2025 Rev.1

● Reel Dimensions

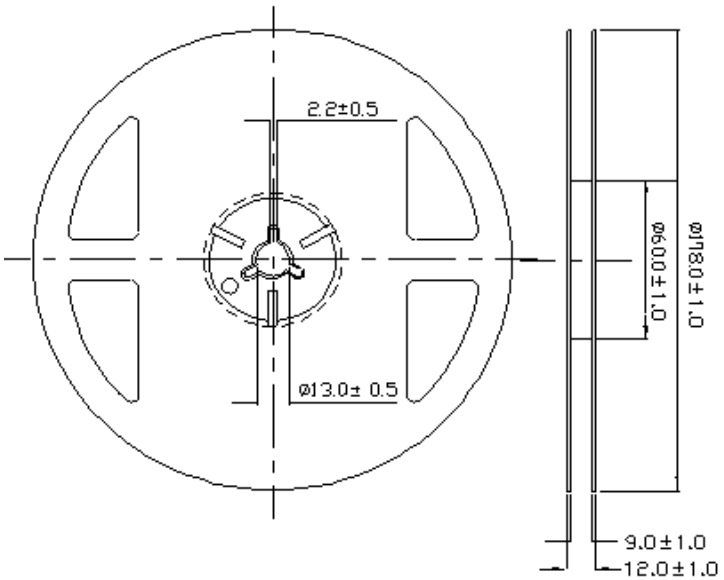

Notes:

1. Dimensions are in millimeters.
2. Tolerances unless mentioned are ±0.2mm.

● Moisture Resistant Packing Process

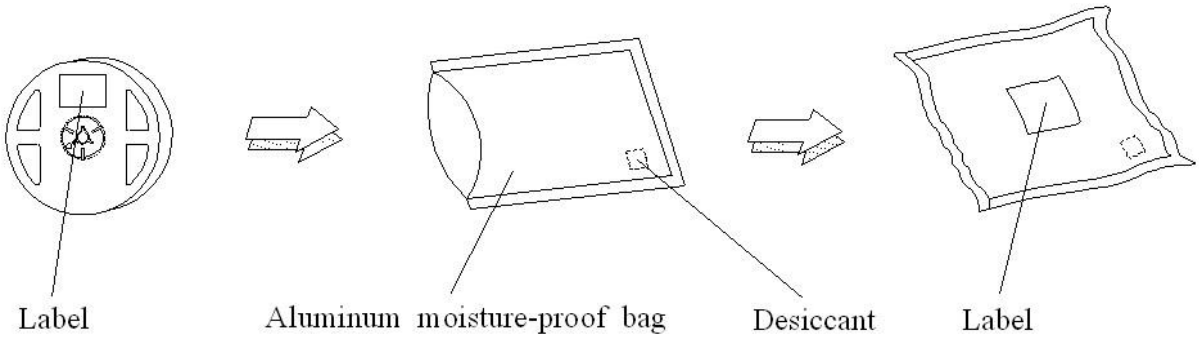

Notes:

1. Dimensions are in millimeters.
2. Tolerances unless mentioned are ±0.2mm.

Copyright © 2016, Everlight All Rights Reserved. Release Date:17.Jul.2025 Rev.1

11. Precaution for Use

1. Over-current-proof
   Customer must apply resistors for protection; otherwise slight voltage shift will cause big current change (burn out will happen).

2. Assemblies
   Do not stack assemblies containing LEDs to prevent damage to the optical surface of LEDs. Forces applied to the optical surface may result in the surface being damaged.

3. Soldering Condition
   3.1 When soldering, do not put stress on the LEDs during heating.
   3.2 After soldering, do not warp the circuit board.

4. Soldering Iron
   Each terminal is to go to the tip of soldering iron temperature less than 350℃ for 3 seconds within once in less than the soldering iron capacity 25W. Leave two seconds and more intervals, and do soldering of each terminal. Be careful because the damage of the product is often started at the time of the hand solder.

5. Repairing
   Repair should not be done after the LEDs have been soldered. When repairing is unavoidable, a double-head soldering iron should be used (as below figure). It should be confirmed beforehand whether the characteristics of the LEDs will or will not be damaged by repairing.

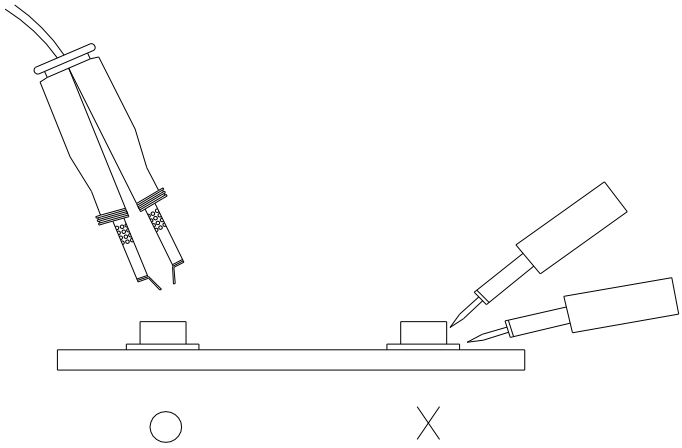

Copyright © 2016, Everlight All Rights Reserved. Release Date:17.Jul.2025 Rev.1

12. Sulfur Test Criteria

Products	Failure Criteria
Exterior Lighting products	Luminous Flux +/-20%, forward voltage +/-10%, color coordinates x,y +/-0.01, color wavelength +/- 2 nm Visual defect issue following Everlight's inspection criteria
Interior lighting products	Luminous Flux +/-30% or +/-50% for some application, forward voltage +/-10%, color coordinates x,y +/-0.02, color wavelength +/- 2 nm Visual defect issue following Everlight's inspection criteria

H2S test	Grade A0	Grade A1	Grade B0	Grade B1
Class A	Pass ΔIV, ΔColor, ΔVF criteria No Corrosion	Pass ΔIV, ΔColor, ΔVF criteria Corrosion without the impact on reliability and lifetime		
Class B			Pass ΔIV, ΔColor, ΔVF criteria No Corrosion	Pass ΔIV, ΔColor, ΔVF criteria Corrosion without the impact on reliability and lifetime

Condition for H2S and FMG	Description	
	H2S	FMG
Class A	15 ppm with duration 336 h at 40 °C and 90% RH	Duration 500 h at 25 °C and 75% RH. H2S concentration: 10ppb SO2 concentration: 200ppb NO2 concentration: 200ppb Cl2 concentration: 10ppb
Class B	10 ppm with duration 500 h at 25 °C and 75% RH	

Grade for H2S Test	Description
0	No Corrosion
1	Corrosion without the impact on reliability and lifetime

Copyright © 2016, Everlight All Rights Reserved. Release Date:17.Jul.2025 Rev.1