EVERLIGHT AUTOMOTIVE

DATASHEET

EL TOP VIEW LED
67-11-PA0602H-AM



Features

- Package：PLCC 2 package
- Color：Phosphor Converted Amber/Yellow
- Typ. Luminance Intensity：4500 mcd @ 60mA
- Viewing angle：120º
- ESD：8KV
- MSL：3
- Typ.color coordinates : (0.57,0.42)
- Qualified AEC-Q102
- Sulfur robustness：Class B1
- The product itself will remain within RoHS compliant version
- Compliance with EU REACH
  Compliance Halogen Free (Br<900ppm, Cl<900ppm, Br+Cl<1500ppm)

Applications

- Automotive interior lighting
- Switches.
- Cluster.

Contents

1. Characteristics 3
2. Absolute Maximum Ratings 4
3. Characteristics Graph 5
4. Binning Information 10
5. Part Number 13
6. Ordering Information 14
7. Mechanical Dimension 15
8. Recommended Soldering Pad 16
9. Reflow Soldering Profile 16
10. Packaging Information 17
11. Precaution for Use 19
12. Sulfur Test Criteria 20

Copyright © 2016,Everlight All Rights Reserved.Release Date: 17.Jul.2025 Issue No: Rev.1

1. Characteristics

Parameter		Symbol	Min.	Typ.	Max.	Unit	Condition
Forward Current		I_F	8	60	80	mA	---
Luminous Intensity		I_V	2800	4500	9000	mcd	I_F=60mA
Forward Voltage		V_F	2.50	3.1	3.75	V	I_F=60mA
Viewing Angle		φ	---	120	---	deg	I_F=60mA
Color		CIE x	---	0.57	---		I_F=60mA
Color		CIE y	---	0.42	---	---	I_F=60mA
Thermal Resistance (Junction to Solder)	Real	$R_{th\ JS\ real}$	---	---	130	K/W	I_F=60mA
	Electrical	$R_{th\ JS\ el}$	---	---	100		

Notes:

1. Luminous Flux measurement tolerance: ±8%.
2. The data of Luminous Flux measured at thermal pad=25°C
3. Forward voltage measurement tolerance: ±0.05V
4. The V_F range shown in the table above indicates 99% output.
5. Tolerance of Chromaticity Coordinates x,y：±0.005

Copyright © 2016,Everlight All Rights Reserved.Release Date: 17.Jul.2025 Issue No: Rev.1

2. Absolute Maximum Ratings

Parameter	Symbol	Ratings	Unit
Power Dissipation	P_d	300	mW
Forward Current	I_F	80	mA
Surge Current (t<=10 μs; D=0.005; T_s=25 ℃)	I_{FM}	250	mA
Reverse Voltage	V_R	Not designed for reverse operation	V
Junction Temperature	T_J	125	°C
Operating Temperature	T_{opr}	-40 ~ +110	°C
Storage Temperature	T_{stg}	-40 ~ +110	°C
ESD Sensitivity (R=1.5kΩ, C= 100pF)	ESD_{HBM}	8	kV
Soldering Temperature	Reflow	260°C for 30sec	°C

Copyright © 2016,Everlight All Rights Reserved.Release Date: 17.Jul.2025 Issue No: Rev.1

3. Characteristics Graph

Wavelength Characteristics Relative Spectral Distribution
@ Ts = 25°C, I_F=60mA

$$\Phi_V / \Phi_V\,(Max.) = f(\lambda)$$

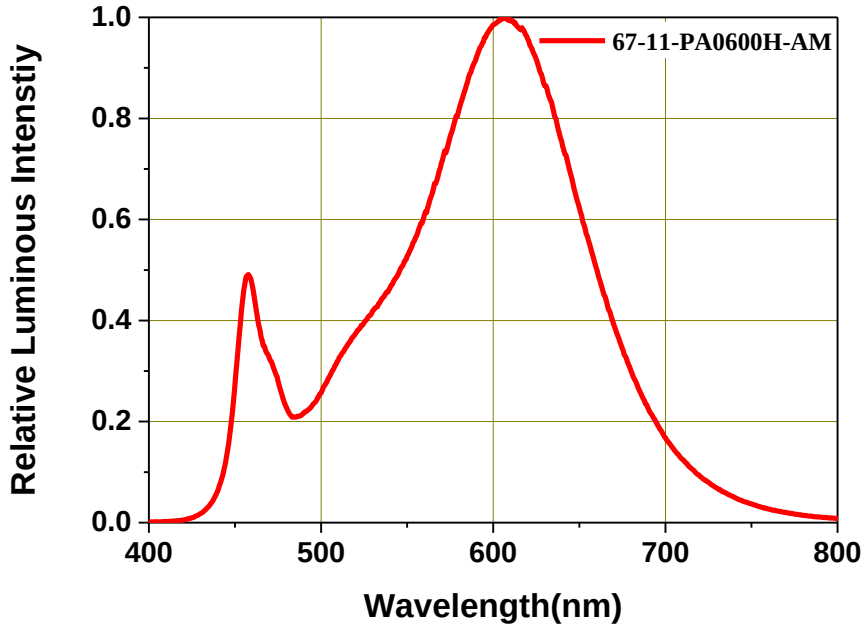

Typical Diagram Characteristics of Radiation

$$\Phi_V / \Phi_V\,(0^\circ) = f(\varphi)$$

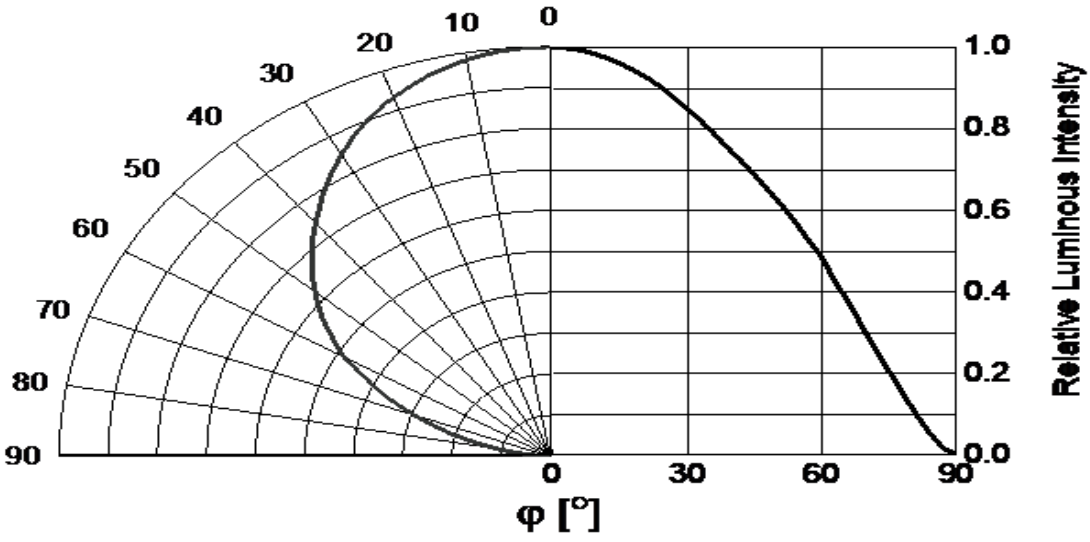

Notes:

1. φ is the off axis angle from lamp centerline where the luminous intensity is 1/2 of the peak value.
2. View angle tolerance is ± 5°.

Copyright © 2016,Everlight All Rights Reserved.Release Date: 17.Jul.2025 Issue No: Rev.1

Forward Current vs. Forward Voltage
@ Ts = 25°C

$$I_F = f(V_F)$$

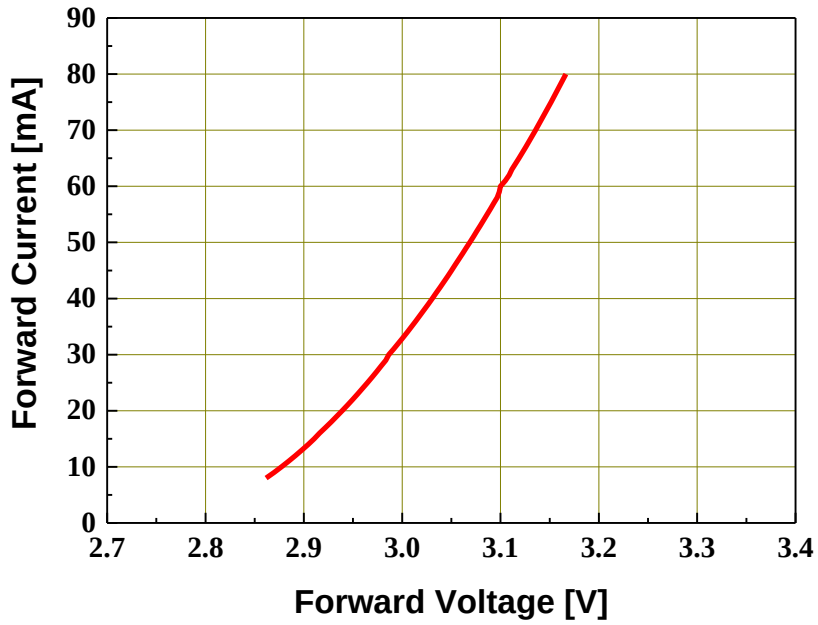

Relative Luminous Intensity vs. Forward Current
@ Ts = 25°C

$$\Phi_V / \Phi_V\,(60mA) = f(I_F)$$

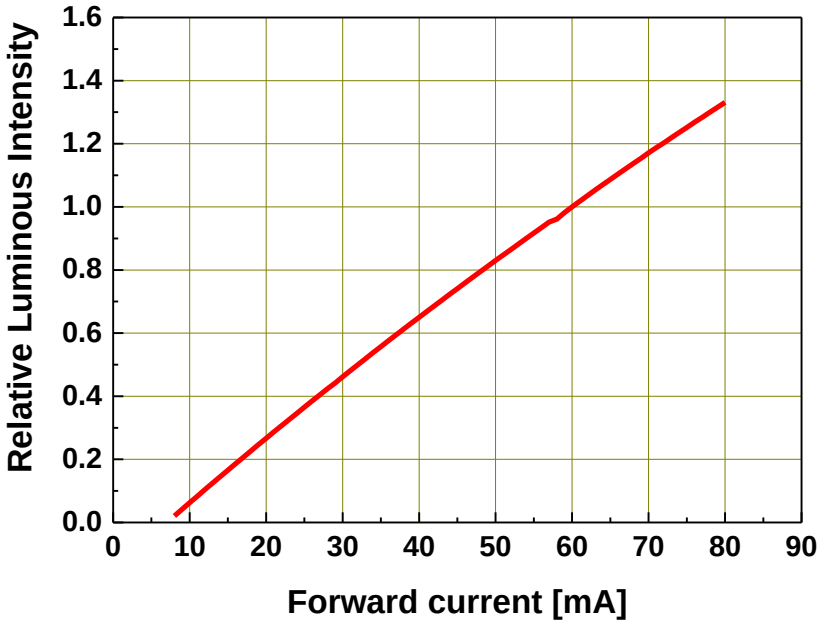

Copyright © 2016,Everlight All Rights Reserved.Release Date: 17.Jul.2025 Issue No: Rev.1

Chromaticity Coordinates Shift vs. Forward Current

@ Ts = 25°C

$$\triangle CIE\ x, \triangle CIE\ y = f(I_F)$$

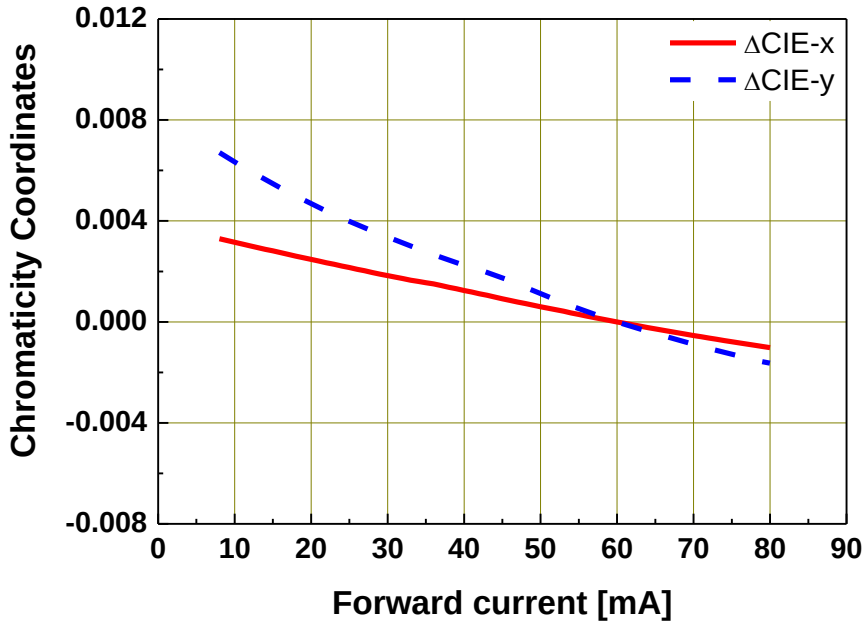

Relative Forward Voltage vs. Junction Temperature

@ IF=60mA

$$\Delta V_F = V_F - V_F(25^\circ C) = f(T_j)$$

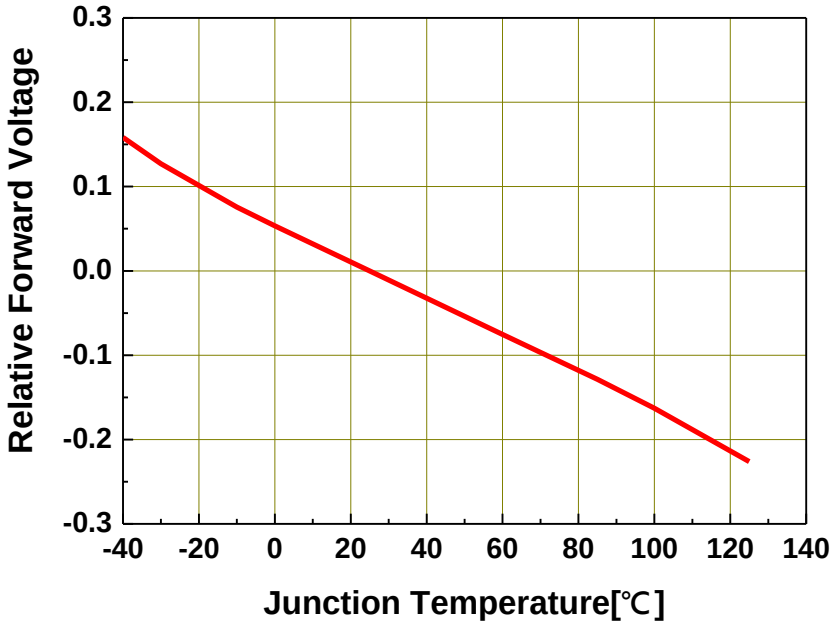

Copyright © 2016,Everlight All Rights Reserved.Release Date: 17.Jul.2025 Issue No: Rev.1

Relative Luminous Intensity vs. Junction Temperature

@ I_F=60mA

$$\Phi_V / \Phi_V(25^\circ C) = f(T_j)$$

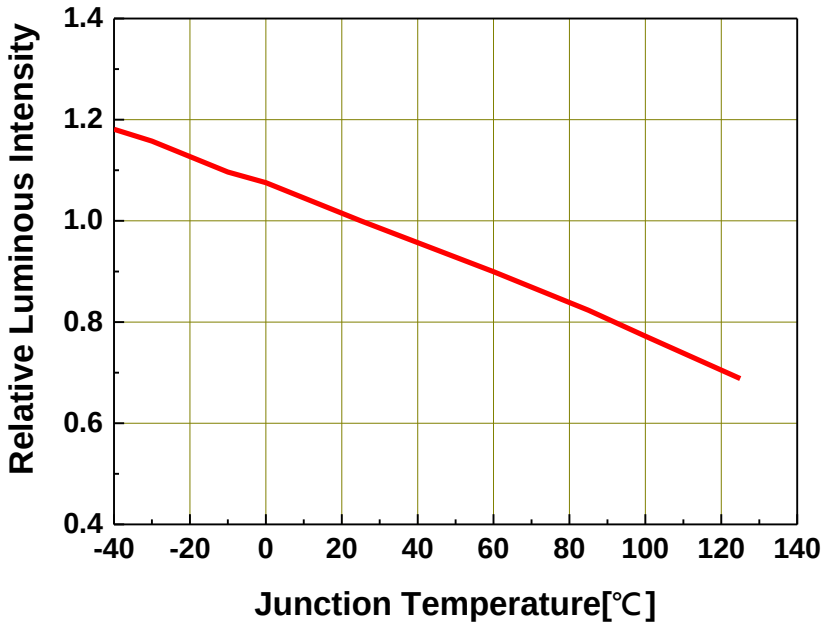

Chromaticity Coordinates Shift vs. Junction Temperature

@ I_F=60mA

$$\triangle CIE\,x, \triangle CIE\,y = f(T_j)$$

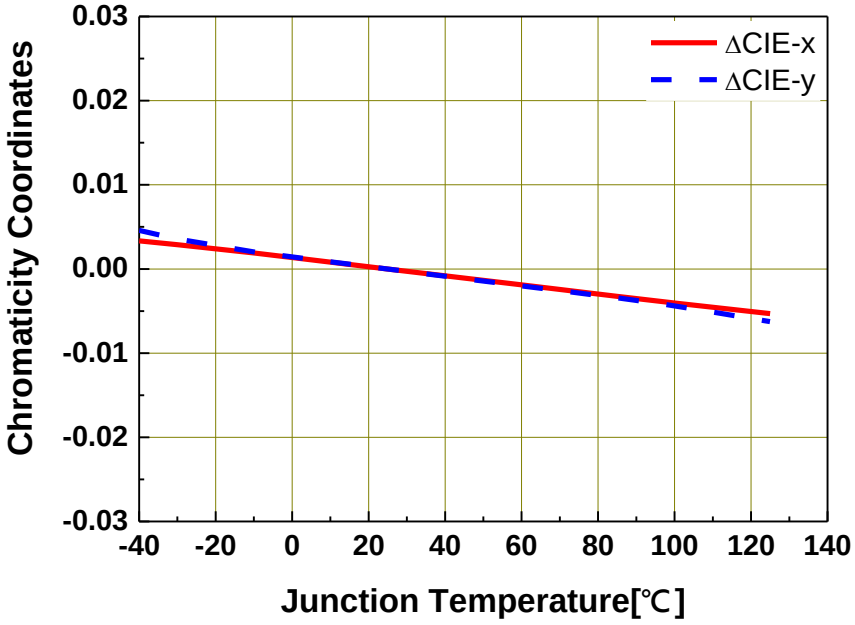

Copyright © 2016,Everlight All Rights Reserved.Release Date: 17.Jul.2025 Issue No: Rev.1

Forward Current Derating Curve

$$I_F = f(T_S)$$

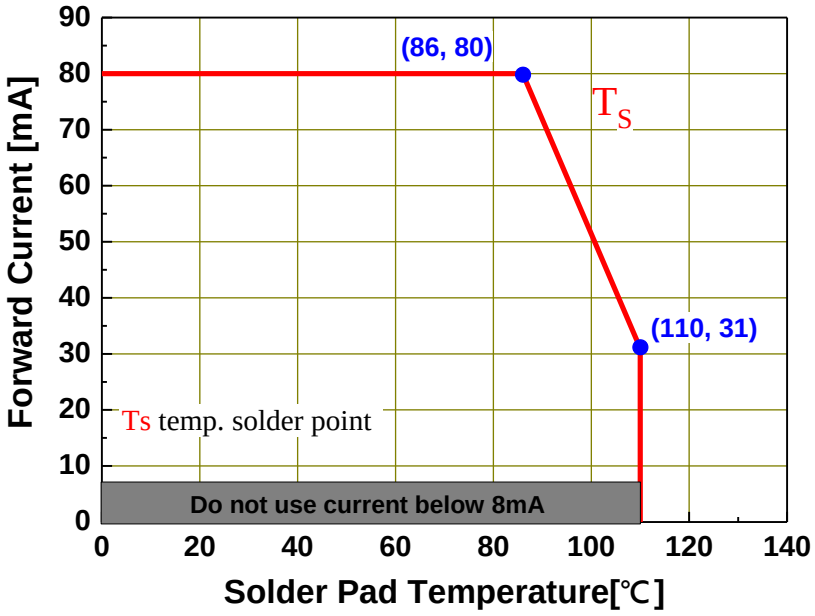

Permissible Pulse Handling Capability

D=Duty cycle , T_S = 25℃

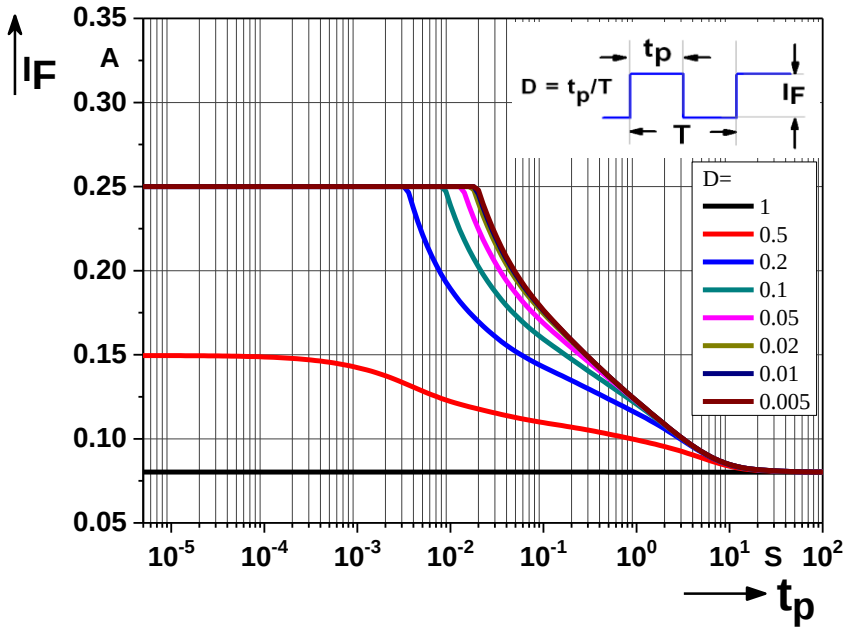

Copyright © 2016,Everlight All Rights Reserved.Release Date: 17.Jul.2025 Issue No: Rev.1

4. Binning Information

Luminous Intensity Bins

Group Bin	Minimum Luminous Intensity (mcd)	Maximum Luminous Intensity (mcd)
L1	11.2	14
L2	14	18
M1	18	22.4
M2	22.4	28
N1	28	35.5
N2	35.5	45
P1	45	56
P2	56	71
Q1	71	90
Q2	90	112
R1	112	140
R2	140	180
S1	180	224
S2	224	280
T1	280	355
T2	355	450
U1	450	560
U2	560	710
V1	710	900
V2	900	1120
AA	1120	1400
AB	1400	1800
BA	1800	2240
BB	2240	2800
CA	2800	3550
CB	3550	4500
DA	4500	5600
DB	5600	7100
EA	7100	9000
EB	9000	11200
FA	11200	14000
FB	14000	18000
GA	18000	22400

Notes:

1. Luminous flux measurement tolerance: ±8%.
2. Highlighted Black Box is possible output bins.

Copyright © 2016,Everlight All Rights Reserved.Release Date: 17.Jul.2025 Issue No: Rev.1

Standard Phosphor Converted Amber Bin Structure

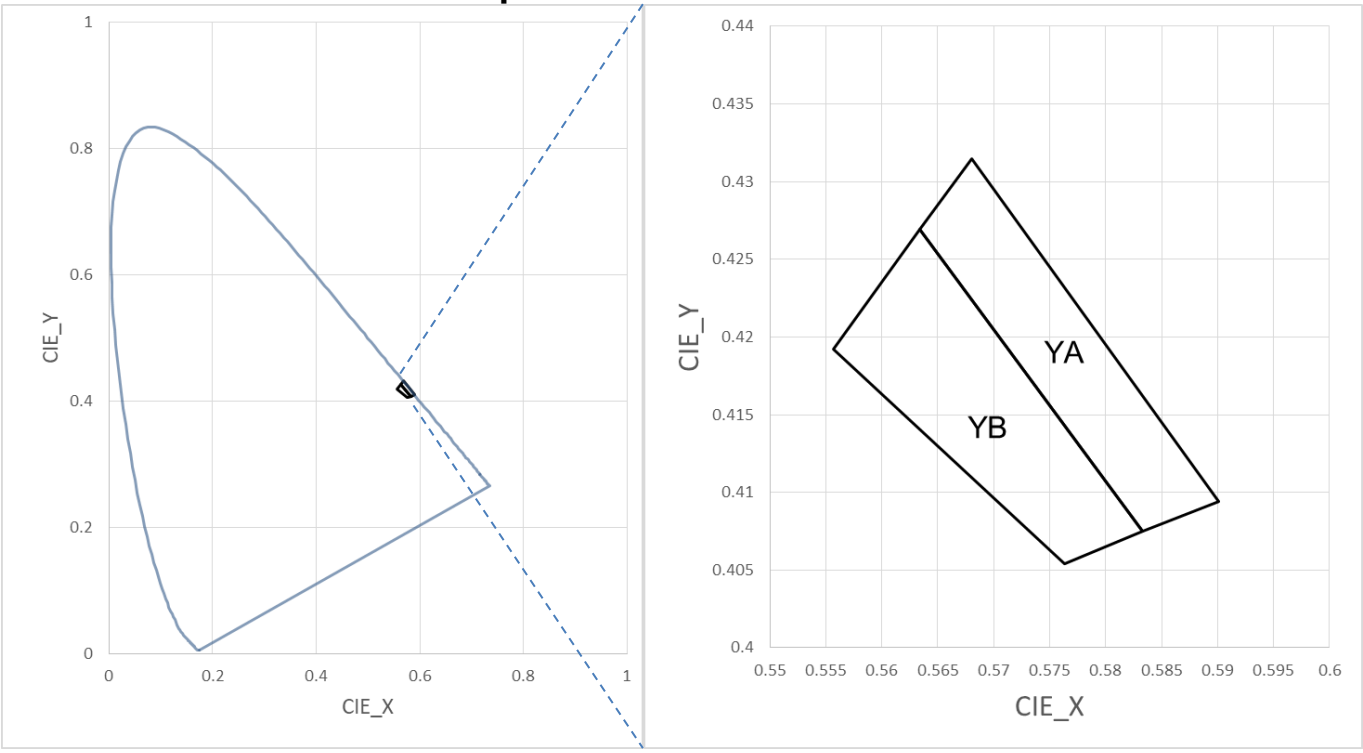

Phosphor Converted Amber Bin Coordinates

Bin Code	CIE_x	CIE_y	Bin Code	CIE_x	CIE_y
YA	0.568	0.4315	YB	0.5763	0.4054
	0.5634	0.4269		0.5833	0.4075
	0.5833	0.4075		0.5634	0.4269
	0.5901	0.4094		0.5557	0.4192

Notes:

1. Color coordinated measurement allowance：±0.005

Copyright © 2016,Everlight All Rights Reserved.Release Date: 17.Jul.2025 Issue No: Rev.1

Forward Voltage Bins

Bin code	Min Forward Voltage [V]	Max Forward Voltage [V]
1012	1.00	1.25
1215	1.25	1.50
1517	1.50	1.75
1720	1.75	2.00
2022	2.00	2.25
2225	2.25	2.50
2527	2.50	2.75
2730	2.75	3.00
3032	3.00	3.25
3235	3.25	3.50
3537	3.50	3.75
3740	3.75	4.00
4042	4.00	4.25
4245	4.25	4.50
4547	4.50	4.75
4750	4.75	5.00
5052	5.00	5.25
5255	5.25	5.50
5557	5.50	5.75
5760	5.75	6.00
6062	6.00	6.25
6265	6.25	6.50
6567	6.50	6.75
6770	6.75	7.00

Notes:

2. Forward voltage measurement tolerance: ±0.05V.
3. Forward voltage bins are defined at I_F = 60mA operation.

Copyright © 2016,Everlight All Rights Reserved.Release Date: 17.Jul.2025 Issue No: Rev.1

5. Part Number

67-11-PA0602H-AM

Part number is designated with below details.

67-11 = Product family name.

PA = Color [1]

020 = Test current [mA]

2 = Lead Frame Type

H = Brightness Level (H=High ; M=Medium ; L=Low)

AM = Automotive application

Note

[1] Color :

Symbol	Description
C	Cool White
N	Neutral White
W	Warm White
G	General White
UB	Blue
CN	Cyan Blue
PG	Pale Green
UG	Green
UPG	Pure Green
UYG	Brilliant Yellow Green
UY	Yellow
SO	Super orange
UR	Red
SR	Super Red
IB	Ice Blue
SB	Sky Blue
PA	Phosphor Converted Amber
PR	Phosphor Converted Red
PP	Phosphor Converted Purple
PYG	Phosphor Converted Yellow Green
RGB	RGB-Color

Copyright © 2016,Everlight All Rights Reserved.Release Date: 17.Jul.2025 Issue No: Rev.1

6. Ordering Information

67-11-PA0602H-ABCDEFGHJKLM-NO-AM

Part Number of the 67-11	Order Code
67-11-PA0602H-AM	67-11-PA0602H-ABCDEFGHJKLM-NO-AM

Order code contains information with below details：

ABCD = min/max wavelength or CCT

EFGH = min./max. luminous flux in [lm] or luminous intensity in [mcd]

JKLM = min./max. forward voltage

NO = internal code

AM = Automotive Application

Copyright © 2016,Everlight All Rights Reserved.Release Date: 17.Jul.2025 Issue No: Rev.1

7. Mechanical Dimension

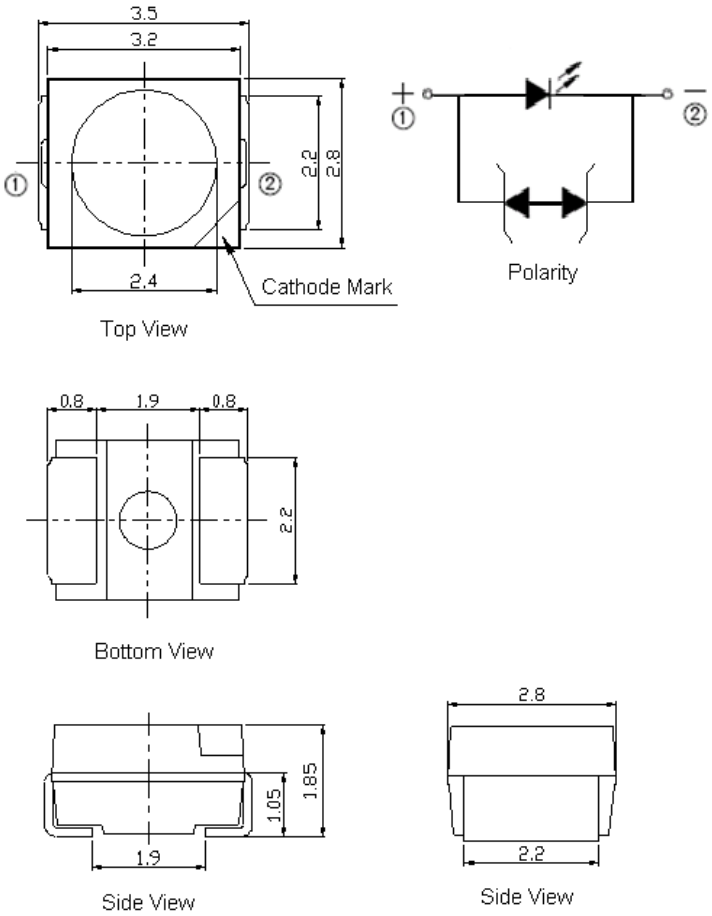

Notes:

1. Dimensions are in millimeters.
2. Tolerances unless mentioned are ± 0.1mm.

Copyright © 2016,Everlight All Rights Reserved.Release Date: 17.Jul.2025 Issue No: Rev.1

8. Recommended Soldering Pad

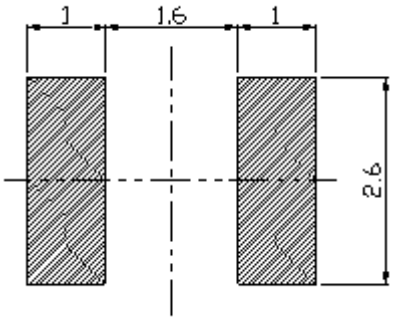

9. Reflow Soldering Profile

Soldering Condition (Reference: IPC/JEDEC J-STD-020D)

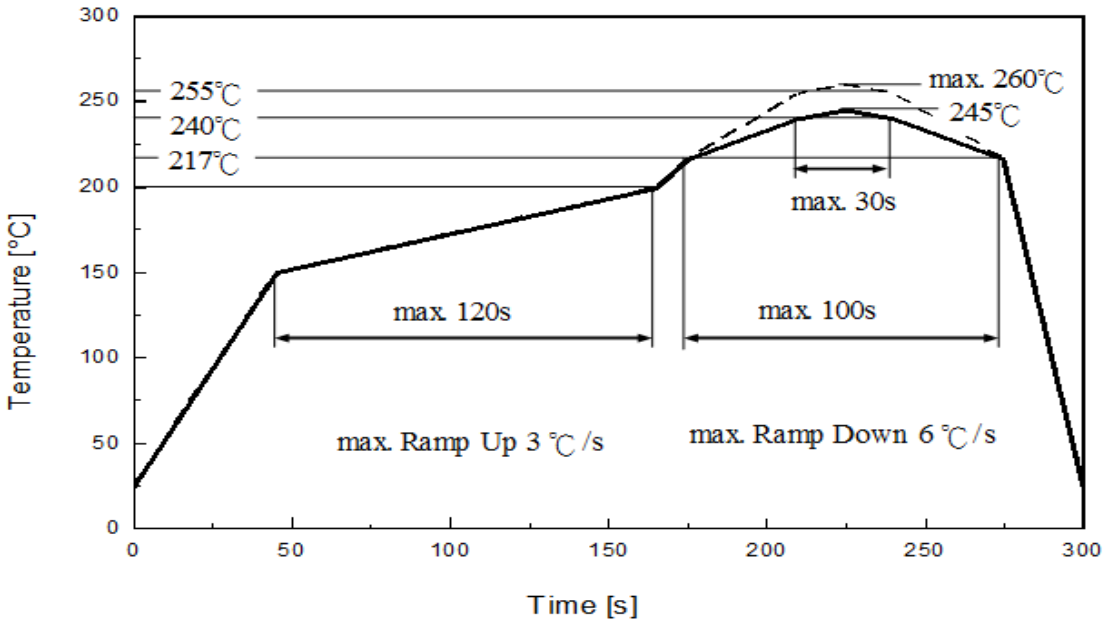

Profile Feature	Pb-Free Assembly Recommendation	Unit
Ramp-up rate to preheat 25 °C to 150 °C	3	°C /sec
Time of soaking zone 150 °C to 200 °C	120	sec
Ramp-up rate to peak	3	°C /sec
Liquidus temperature	217	°C
Time above liquidus temperature	100	sec
Peak temperature (max.)	260	°C
Time within 5°C of the specified peak temperature	30	sec
Ramp-down Rate (max.)	6	°C /sec

Copyright © 2016,Everlight All Rights Reserved.Release Date: 17.Jul.2025 Issue No: Rev.1

10. Packaging Information

• Product Labeling



- CPN：Customer's Product Number
- P/N ：Everlight Part Number
- QTY：Packing Quantity
- CAT： Luminous Flux (Brightness) Bin
- HUE：Color Bin
- REF： Forward Voltage Bin
- LOT No：Lot Number

• Packing: Loaded Quantity 2000 pcs Per Reel

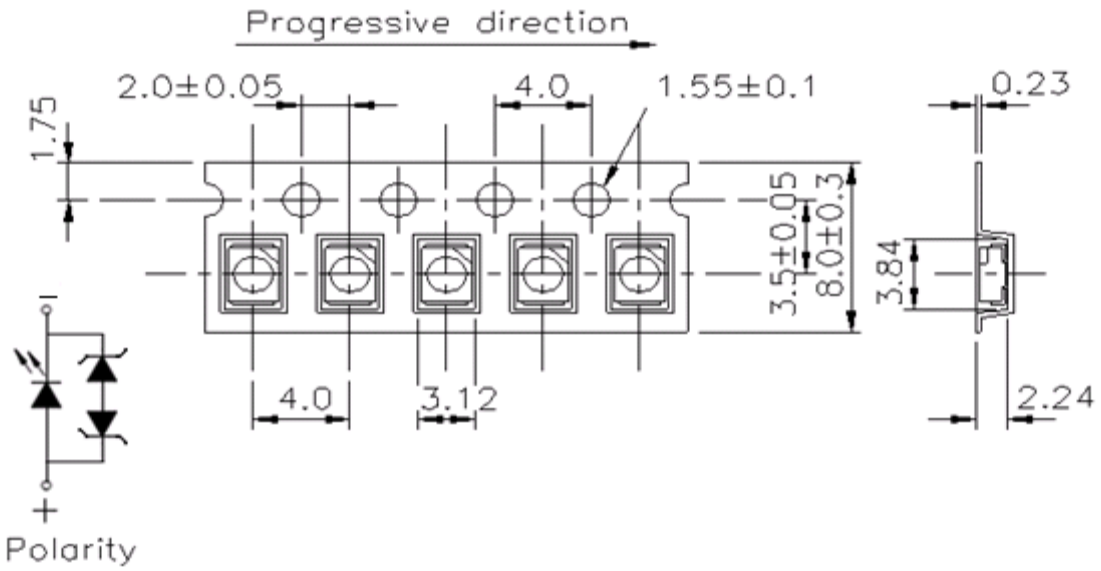

Notes:

1. Dimensions are in millimeters.

Copyright © 2016,Everlight All Rights Reserved.Release Date: 17.Jul.2025 Issue No: Rev.1

● Reel Dimensions

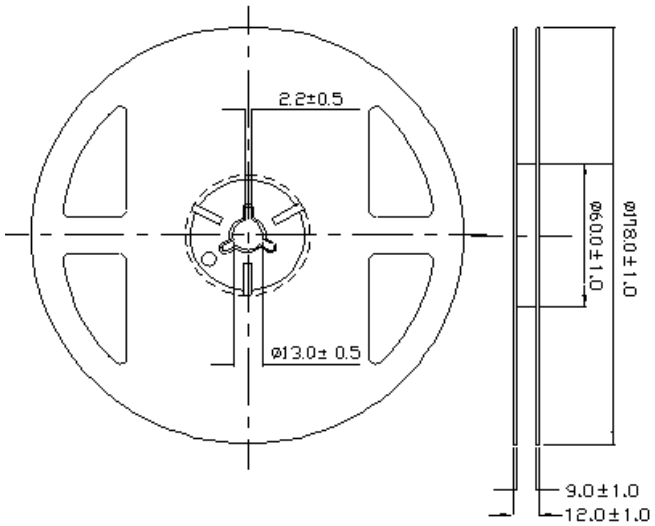

Notes:

1. Dimensions are in millimeters.

● Moisture Resistant Packing Process

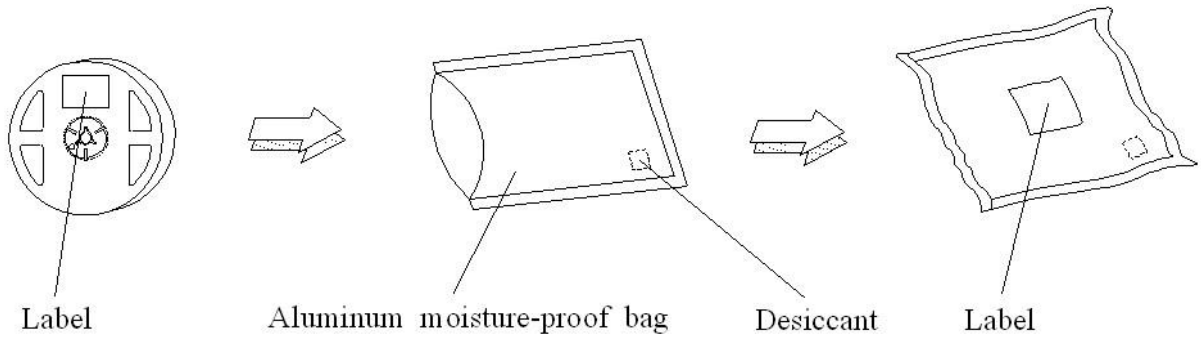

Copyright © 2016,Everlight All Rights Reserved.Release Date: 17.Jul.2025 Issue No: Rev.1

11. Precaution for Use

1. Over-current-proof
   Customer must apply resistors for protection; otherwise slight voltage shift will cause big current change (burn out will happen).

2. Assemblies
   Do not stack assemblies containing LEDs to prevent damage to the optical surface of LEDs. Forces applied to the optical surface may result in the surface being damaged.

3. Soldering Condition
   3.1 When soldering, do not put stress on the LEDs during heating.
   3.2 After soldering, do not warp the circuit board.

4. Soldering Iron
   Each terminal is to go to the tip of soldering iron temperature less than 350℃ for 3 seconds within once in less than the soldering iron capacity 25W. Leave two seconds and more intervals, and do soldering of each terminal. Be careful because the damage of the product is often started at the time of the hand solder.

5. Repairing
   Repair should not be done after the LEDs have been soldered. When repairing is unavoidable, a double-head soldering iron should be used (as below figure). It should be confirmed beforehand whether the characteristics of the LEDs will or will not be damaged by repairing.

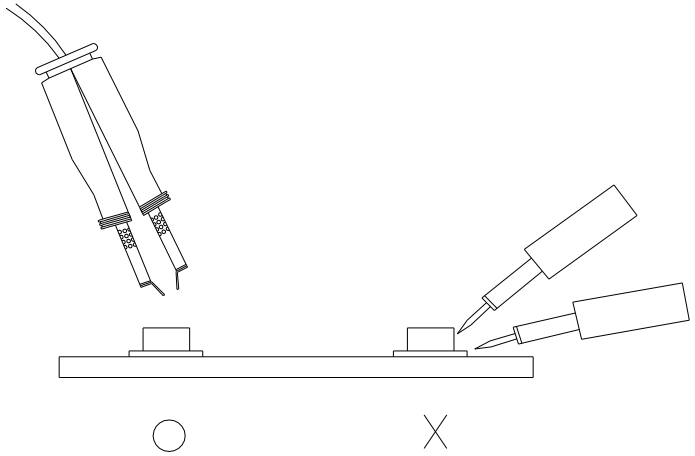

Copyright © 2016,Everlight All Rights Reserved.Release Date: 17.Jul.2025 Issue No: Rev.1

12. Sulfur Test Criteria

Products	Failure Criteria
Exterior Lighting products	Luminous Flux +/-20%, forward voltage +/-10%, color coordinates x,y +/-0.01, color wavelength +/- 2 nm Visual defect issue following Everlight's inspection criteria
Interior lighting products	Luminous Flux +/-30% or +/-50% for some application, forward voltage +/-10%, color coordinates x,y +/-0.02, color wavelength +/- 2 nm Visual defect issue following Everlight's inspection criteria
Grade of H2S and FMG test	Please refer to the table as below. As for discolor, please refer to the Frame blackening after Grade of H2S and FMG test defect under Everlight's inspection criteria

	Grade A0	Grade A1	Grade B0	Grade B1
C12 H2S Class A C13 FMG	No corrosion	Corrosion without the impact on reliability and life time, following AEC-Q102 rev. A		
C12 H2S Class B C13 FMG			No corrosion	Corrosion without the impact on reliability and life time, following AEC-Q102 rev. A

Class for H2S Test & FMG	Description	
	H2S	FMG
Class A	15 ppm with duration 336 h at 40 °C and 90% RH.	Duration 500 h at 25 °C and 75% RH. H2S concentration: 10ppb SO2 concentration: 200ppb NO2 concentration: 200ppb Cl2 concentration: 10ppb
Class B	10 ppm with duration 500 h at 25 °C and 75% RH.	

Class for H2S Test & FMG	Description
0	No corrosion found
1	Corrosion without the impact on reliability and life time, following AEC-Q102 rev. A

Copyright © 2016,Everlight All Rights Reserved.Release Date: 17.Jul.2025 Issue No: Rev.1