EVERLIGHT AUTOMOTIVE

DATASHEET

SMD MID Power LED
67-11S-PA1500H-AM



Features

- Package: PLCC 2 package
- Color: PC Amber
- Typical luminous intensity : 44 lm @ 150mA
- Viewing angle : 120°
- ESD : up to 8KV
- MSL : 3
- Qualifications：According to AEC-Q101
- The product itself will remain within RoHS compliant version
- Compliance with EU REACH
- Compliance Halogen Free. (Br<900ppm,Cl<900ppm,Br+Cl<1500ppm)
-

Applications

- Automotive Interior Lighting.

Copyright © 2016, Everlight All Rights Reserved. Release Date: Nov.25.2020 Issue No: DSE-0024137 Ver.2

Contents

1.Characteristics 3
2.Absolute Maximum Ratings 4
3.Characteristics Graph 5
4.Binning Information 10
5.Part Number 13
6.Ordering Information 14
7.Mechanical Dimension 15
8.Recommended Soldering Pad 16
9.Reflow Soldering Profile 16
10.Packaging Information 17
11.Precaution for Use 19

Copyright © 2020, Everlight All Rights Reserved. Release Date: 16.Jan.2026 Issue No: Preliminary

1. Characteristics

Parameter		Symbol	Min.	Typ.	Max.	Unit	Condition
Forward Current		I_F	10	150	180	mA	---
Luminous flux [1][2]		IV	33	44	60	lm	I_F=150mA
Forward Voltage[3]		V_F	2.75	3.10	3.75	V	I_F=150mA
Viewing Angle		φ	---	120	---	deg	I_F=150mA
Color[4]		CIE x	---	0.58	---	---	I_F=150mA
		CIE y	---	0.41	---	---	I_F=150mA
Thermal Resistance (Junction to Solder)	Real	$R_{th\ JS\ real}$	---	37	---	K/W	I_F=150mA
	Electrical	$R_{th\ JS\ el}$	---	27	---		

Noes:

1. Luminous flux measurement tolerance: ±8%.
2. The data of Luminous flux measured at thermal pad=25°C
3. Forward voltage measurement tolerance: ±0.05V
4. Tolerance of Chromaticity Coordinates x,y： ±0.005

Copyright © 2020, Everlight All Rights Reserved. Release Date: 16.Jan.2026 Issue No: Preliminary

2. Absolute Maximum Ratings

Parameter	Symbol	Ratings	Unit
Power Dissipation	P_d	675	mW
Forward Current	I_F	180	mA
Reverse Voltage	V_R	Not designed for reverse operation	V
Junction Temperature	T_J	125	°C
Operating Temperature	T_{opr}	-40 ~ +100	°C
Storage Temperature	T_{stg}	-40 ~ +100	°C
ESD Sensitivity (R=1.5kΩ, C= 100pF)	ESD_{HBM}	8	kV
Soldering Temperature	Reflow	260°C for 30sec	°C

Copyright © 2020, Everlight All Rights Reserved. Release Date: 16.Jan.2026 Issue No: Preliminary

3. Characteristics Graph

Wavelength Characteristics Relative Spectral Distribution
@ Ts = 25°C, I_F=150mA

$\Phi_V/\Phi_V\,(Max.) = f(\lambda)$

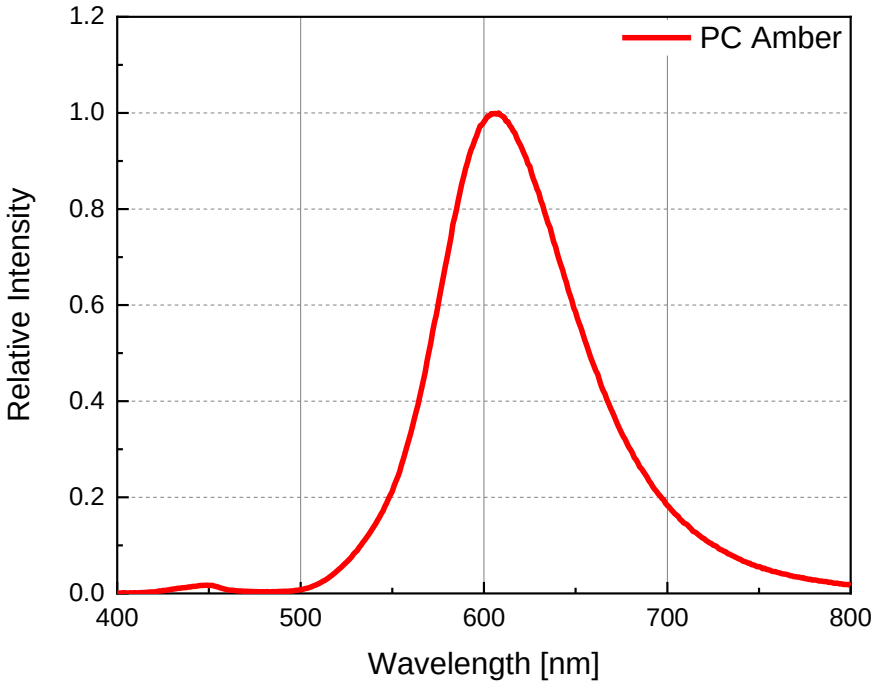

Typical Diagram Characteristics of Radiation

$\Phi_V/\Phi_V\,(0^\circ) = f(\varphi)$

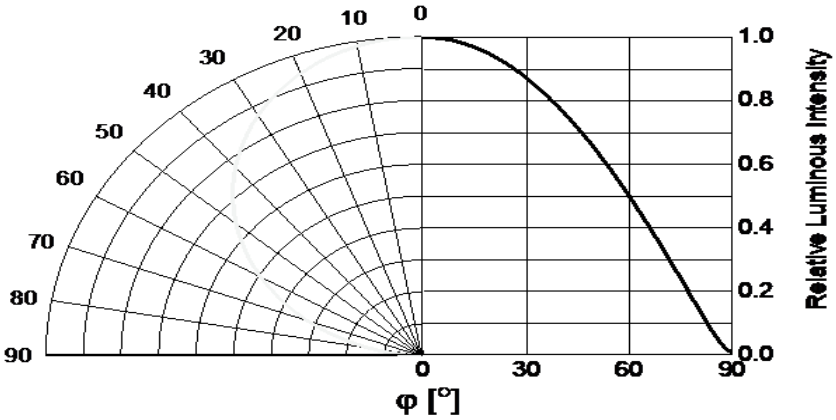

Notes:

1. φ is the off axis angle from lamp centerline where the luminous intensity is 1/2 of the peak value.
2. View angle tolerance is ± 5°.

Copyright © 2020, Everlight All Rights Reserved. Release Date: 16.Jan.2026 Issue No: Preliminary

Forward Current vs. Forward Voltage
@ Ts = 25°C

$$I_F = f(V_F)$$

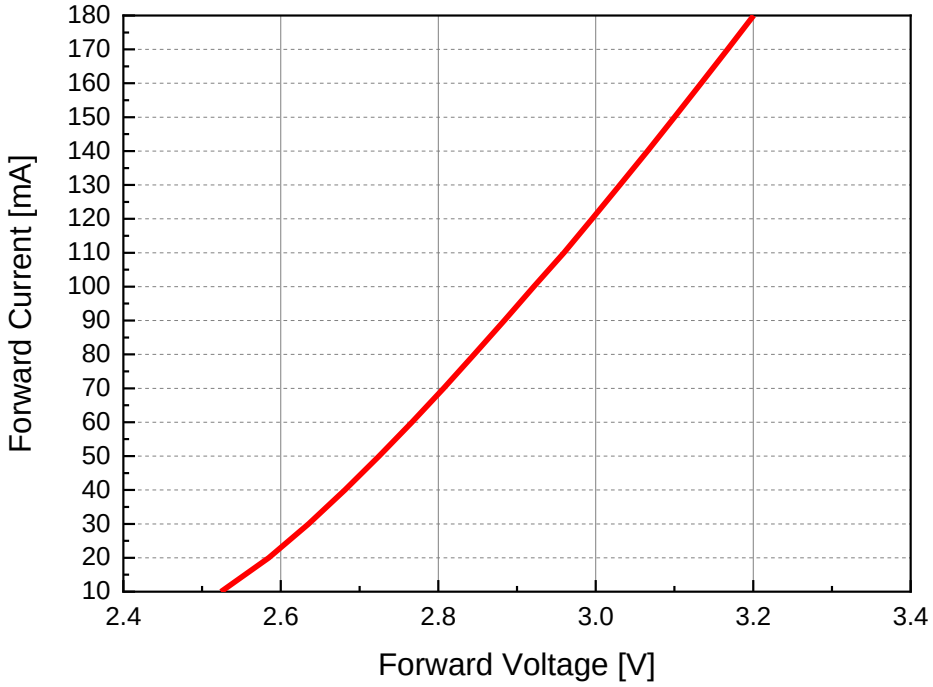

Relative Luminous flux vs. Forward Current
@ Ts = 25°C

$I_V/I_{V(150mA)} = f(I_F)$

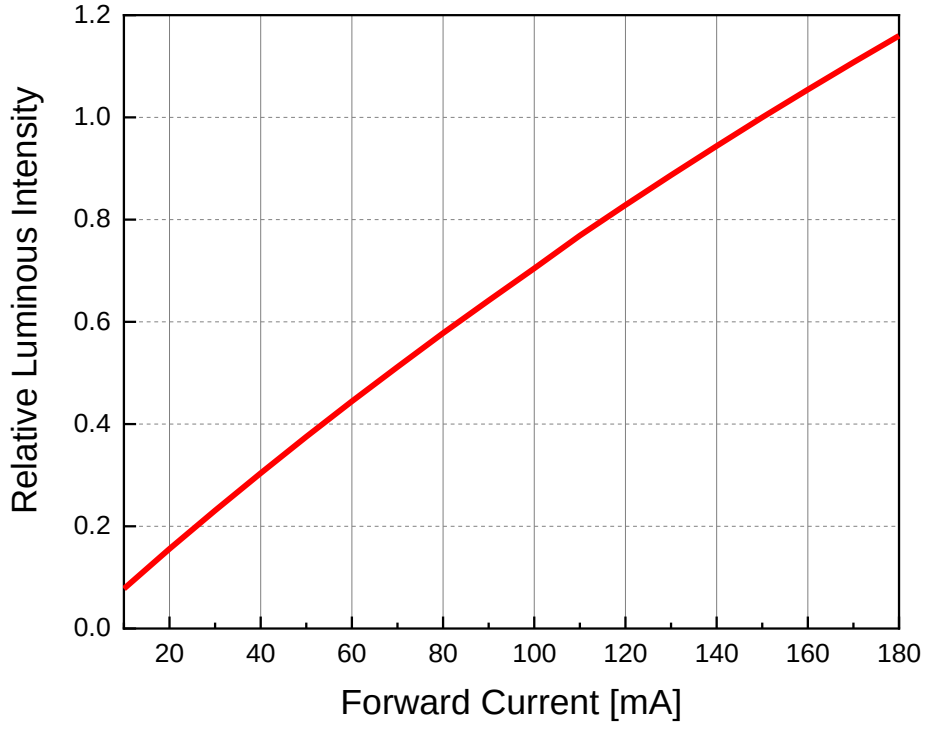

Copyright © 2020, Everlight All Rights Reserved. Release Date: 16.Jan.2026 Issue No: Preliminary

Chromaticity Coordinates Shift vs. Forward Current

@ Ts = 25°C

$$\triangle CIE\ x, \triangle CIE\ y = f(I_F)$$

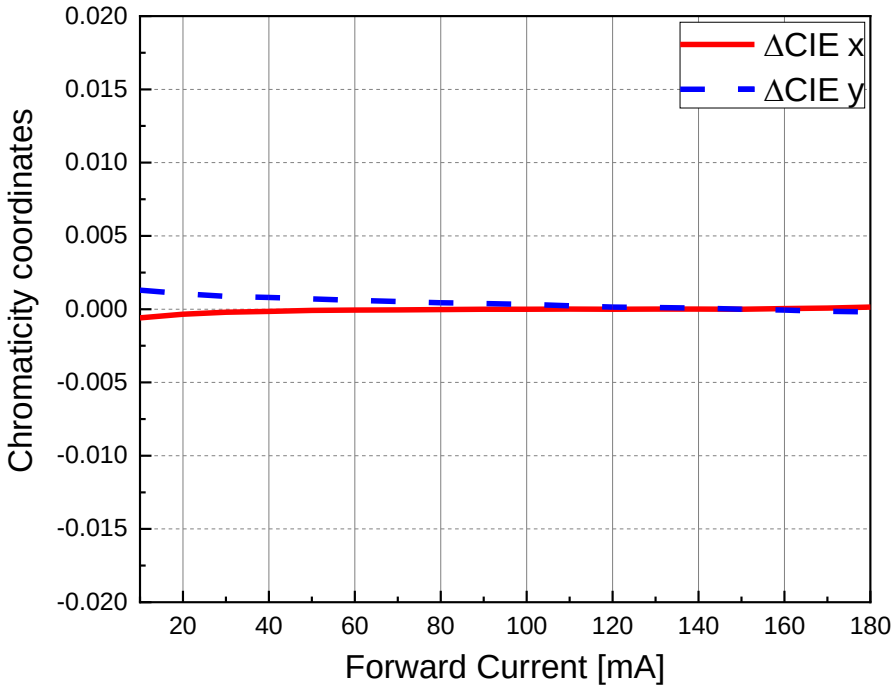

Relative Forward Voltage vs. Junction Temperature

@ I_F=150mA

$$\Delta V_F = V_F - V_F(25^\circ C) = f(T_j)$$

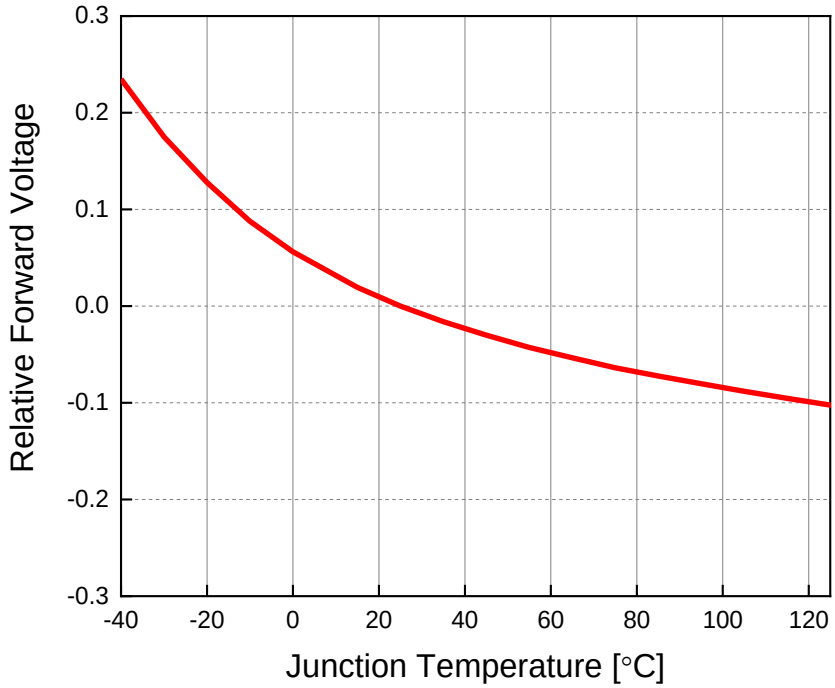

Copyright © 2020, Everlight All Rights Reserved. Release Date: 16.Jan.2026 Issue No: Preliminary

Relative Luminous flux vs. Junction Temperature

@ I_F=150mA

$$\Phi_V / \Phi_V(25^\circ C) = f(T_j)$$

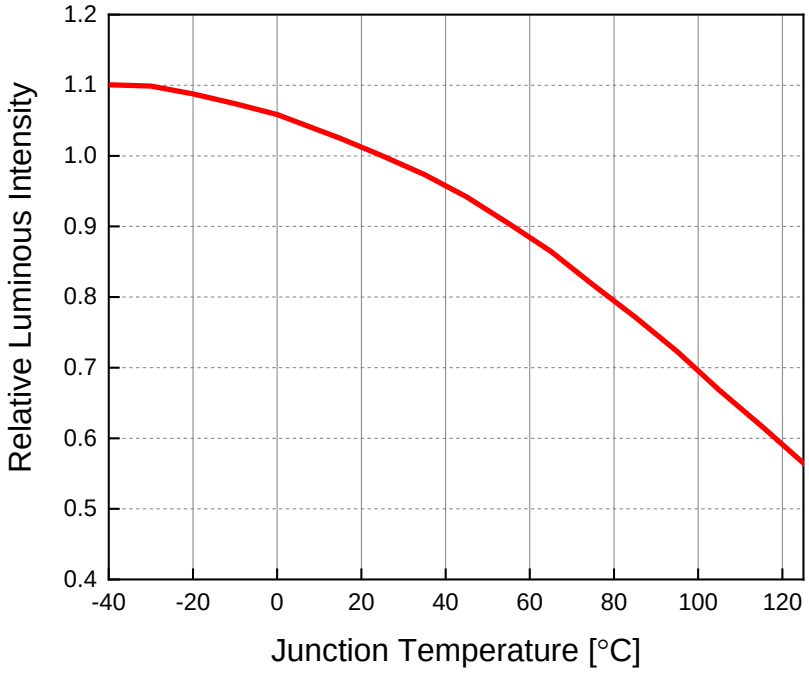

Chromaticity Coordinates Shift vs. Junction Temperature

@ I_F=150mA

$$\triangle CIE\ x, \triangle CIE\ y = f(T_j)$$

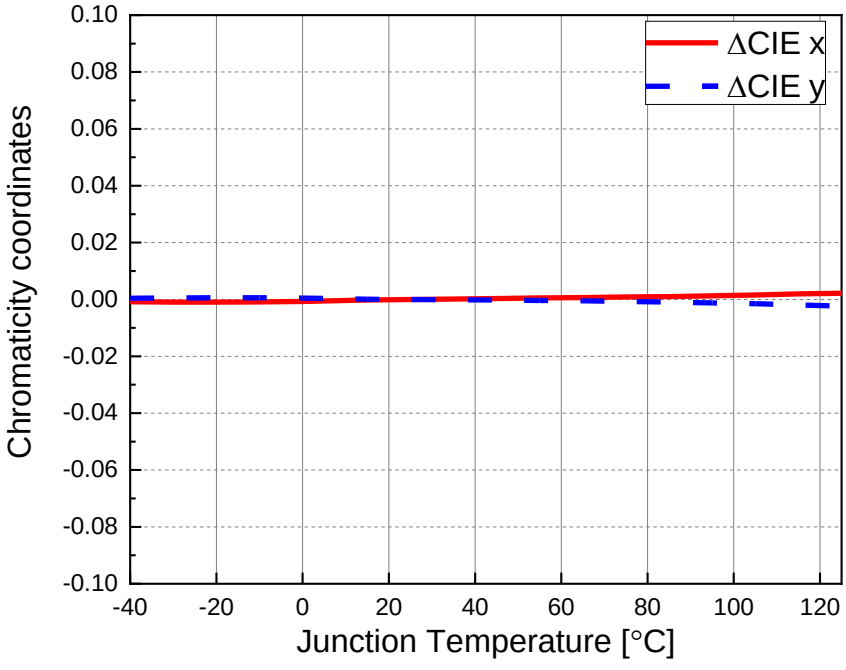

Copyright © 2020, Everlight All Rights Reserved. Release Date: 16.Jan.2026 Issue No: Preliminary

Forward Current Derating Curve

$$I_F = f(T_S)$$

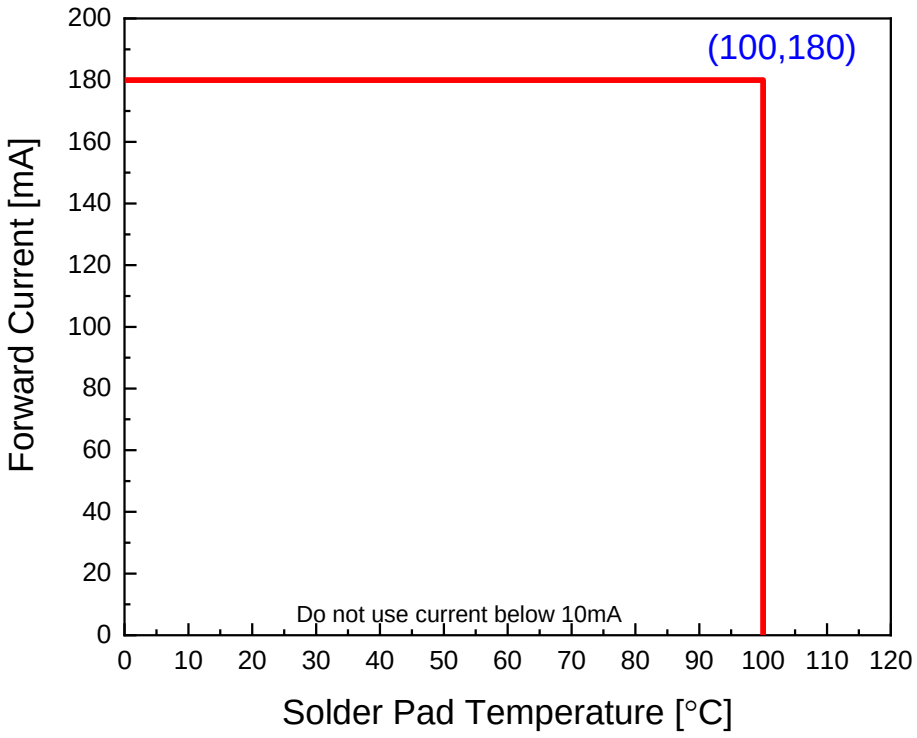

Permissible Pulse Handling Capability

$$I_F = f(t_P);\ D = Duty\,cycle;\ T_A = 25^{\circ}C$$

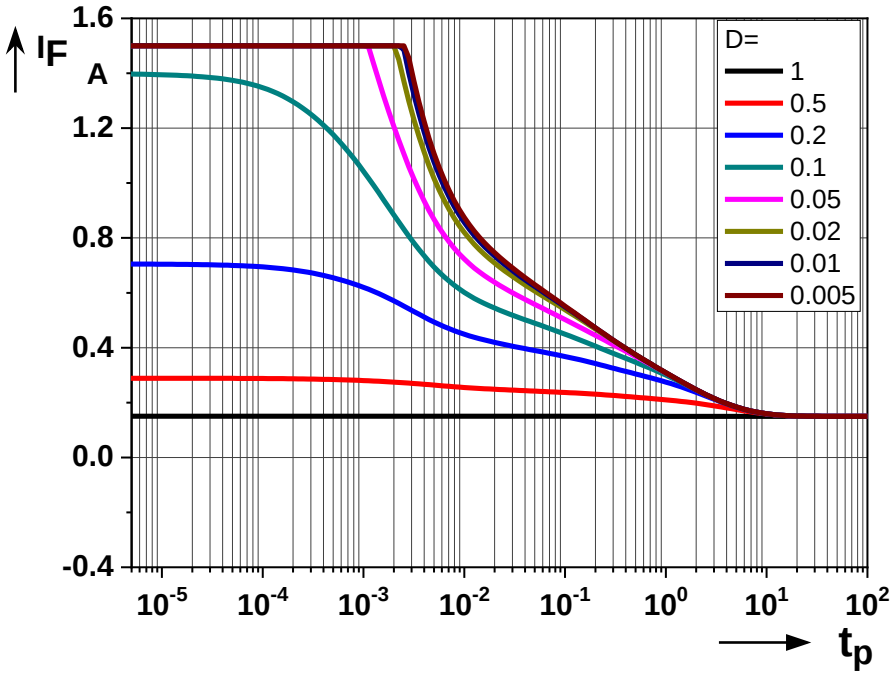

Copyright © 2020, Everlight All Rights Reserved. Release Date: 16.Jan.2026 Issue No: Preliminary

4. Binning Information

Luminous Flux Bins

Group	Bin	Minimum Photometric Flux (lm)	Maximum Photometric Flux (lm)
E	1	4	5
	2	5	6
	3	6	8
	4	8	10
	5	10	13
	6	13	17
	7	17	20
	8	20	23
	9	23	27
F	1	27	33
	2	33	39
	3	39	45
	4	45	52
	5	52	60
	6	60	70
	7	70	80
	8	80	90
	9	90	100

Group	Bin	Minimum Photometric Flux (lm)	Maximum Photometric Flux (lm)
J	1	100	110
	2	110	120
	3	120	130
	4	130	140
	5	140	150
	6	150	160
	7	160	180
	8	180	200
	9	200	225
K	1	225	250
	2	250	275
	3	275	300
	4	300	325
	5	325	350
	6	350	375
	7	375	400
	8	400	425
	9	425	450

1. Luminous intensity measurement tolerance: ±8%.

Copyright © 2020, Everlight All Rights Reserved. Release Date: 16.Jan.2026 Issue No: Preliminary

Standard Phosphor Converted Amber Bin Structure

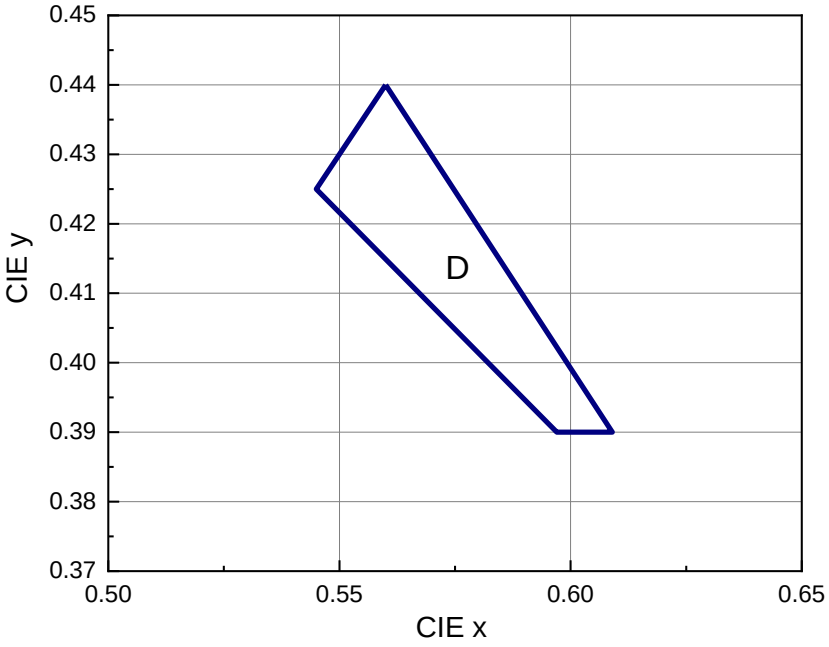

Phosphor Converted Amber Bin Coordinates

Bin Code	CIE_x	CIE_y
D	0.56	0.44
	0.545	0.425
	0.597	0.39
	0.609	0.39

Notes:

1. Tolerance of Chromaticity Coordinates x,y：±0.005

Copyright © 2020, Everlight All Rights Reserved. Release Date: 16.Jan.2026 Issue No: Preliminary

Forward Voltage Bins

Bin	Minimum Forward Voltage [V]	Maximum Forward Voltage [V]
1012	1.00	1.25
1215	1.25	1.75
1517	1.50	1.75
1720	1.75	2.00
2022	2.00	2.25
2225	2.25	2.50
2527	2.50	2.75
2730	2.75	3.00
3032	3.00	3.25
3235	3.25	3.50
3537	3.50	3.75
3740	3.75	4.00
4042	4.00	4.25
4245	4.25	4.50
4547	4.50	4.75
4750	4.75	5.00
5052	5.00	5.25
5255	5.25	5.50
5557	5.50	5.75
5760	5.75	6.00
6062	6.00	6.25
6265	6.25	6.50
6567	6.50	6.75
6770	6.75	7.00

Notes:

1. Forward voltage measurement tolerance: ±0.05V.

Copyright © 2019, Everlight All Rights Reserved. Release Date: Nov.25.2020 Issue No: DSE-0024137 Ver.2

5. Part Number

67-11S-PA1500H-AM

Part number is designated with below details.

67-11S= Product family name.

PA = Color [1]

150 = Test current [mA]

0 = Lead Frame Type

H = Brightness Level (H=High ; M=Medium ; L=Low)

AM = automotive application

Note

[1] Color：

Symbol	Description
C	Cool White
N	Neutral White
W	Warm White
G	General White
UB	Blue
CN	Cyan Blue
PG	Pale Green
UG	Green
UPG	Pure Green
UYG	Brilliant Yellow Green
UY	Yellow
SO	Super orange
UR	Red
SR	Super Red
IB	Ice Blue
SB	Sky Blue
PA	Phosphor Converted Amber
PR	Phosphor Converted Red
PP	Phosphor Converted Purple
PYG	Phosphor Converted Yellow Green
RGB	RGB-Color

Copyright © 2019, Everlight All Rights Reserved. Release Date: Nov.25.2020 Issue No: DSE-0024137 Ver.2

6. Ordering Information

67-11S-PA1500H-ABCDEFGHJLMNOP-QR-AM

Part Number of the SMD MID Power LED	Order Code
67-11S-PA1500H-AM	67-11S-PA1500H-ABCDEFGHJKLMNO-PQ-AM

Order code contains information with below details：

ABCDEF = min/max wavelength or CCT

GHJK = min./max. luminous flux in [lm] or luminous intensity in [mcd]

LMNO = min./max. forward voltage

PQ = internal code

AM = Automotive Application

Copyright © 2019, Everlight All Rights Reserved. Release Date: Nov.25.2020 Issue No: DSE-0024137 Ver.2

7. Mechanical Dimension

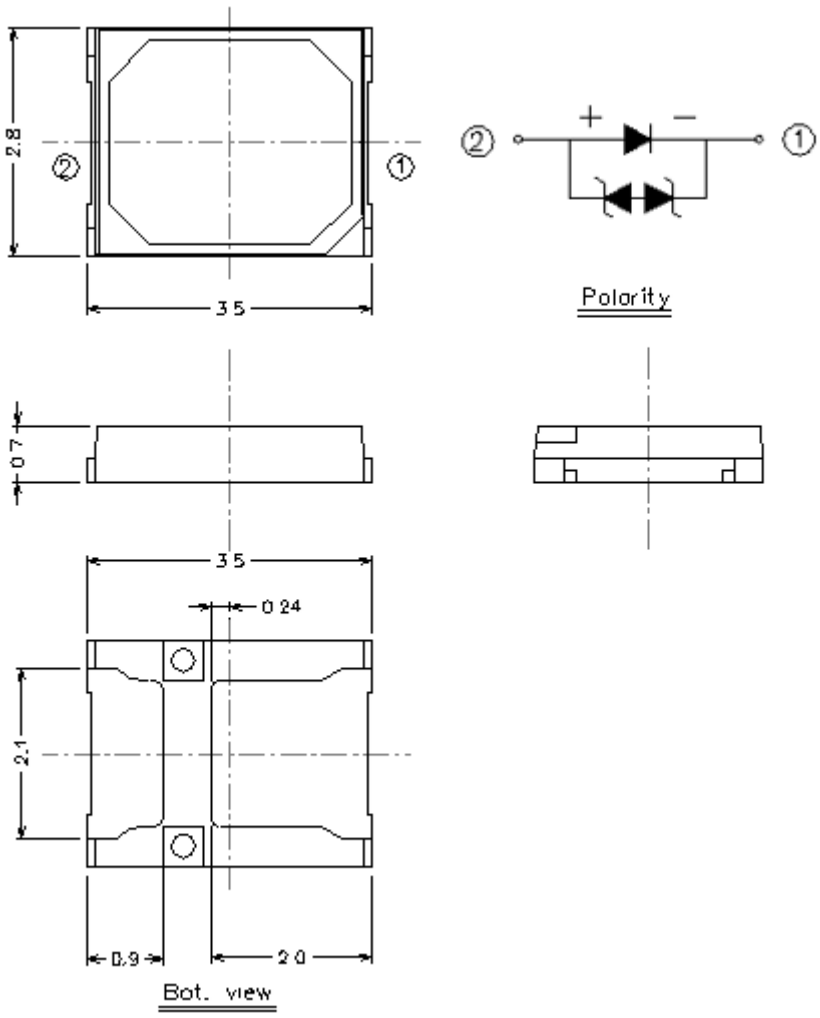

Notes:

1. Dimensions are in millimeters.
2. Tolerances unless mentioned are ± 0.1mm.

Copyright © 2019, Everlight All Rights Reserved. Release Date: Nov.25.2020 Issue No: DSE-0024137 Ver.2

8. Recommended Soldering Pad

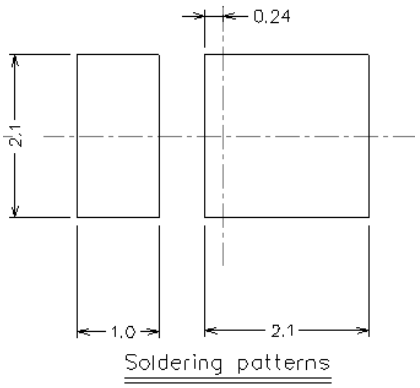

Notes:

1. Dimensions are in millimeters.
2. Tolerances unless mentioned are ± 0.1mm.

9. Reflow Soldering Profile

Soldering Condition (Reference: IPC/JEDEC J-STD-020D)

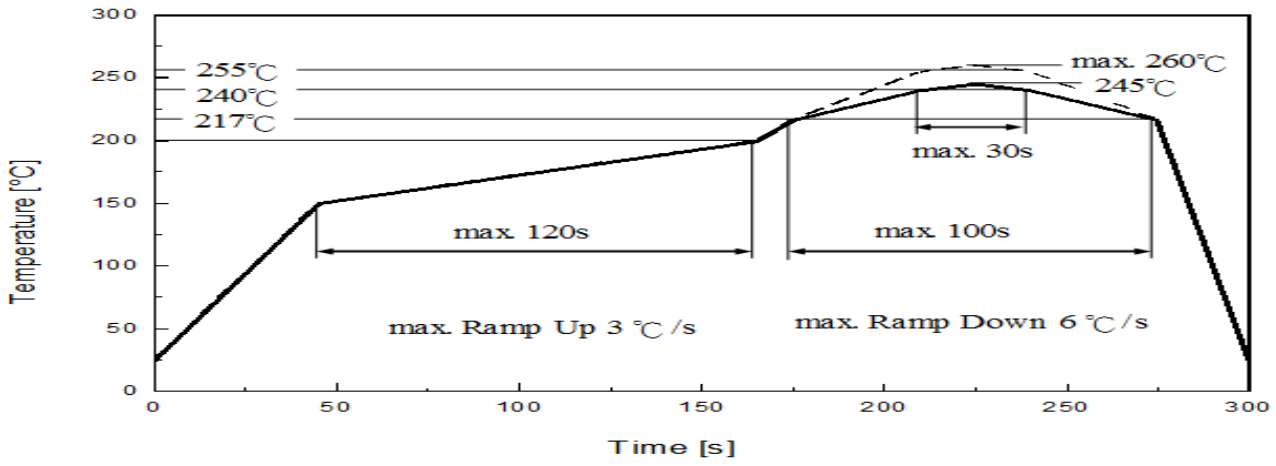

Profile Feature	Pb-Free Assembly Recommendation	Unit Einheit
Ramp-up rate to preheat 25 °C to 150 °C	3	°C /sec
Time of soaking zone 150 °C to 200 °C	120	sec
Ramp-up rate to peak	3	°C /sec
Liquidus temperature	217	°C
Time above liquidus temperature	100	sec
Peak temperature (max.)	260	°C
Time within 5°C of the specified peak temperature	30	sec
Ramp-down Rate (max.)	6	°C /sec

Copyright © 2019, Everlight All Rights Reserved. Release Date: Nov.25.2020 Issue No: DSE-0024137 Ver.2

10. Packaging Information

• Product Labeling

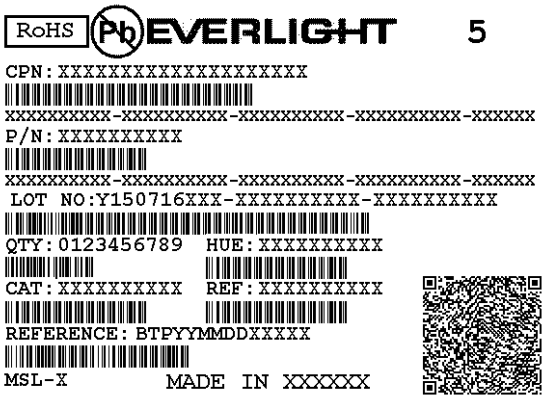

- CPN：Customer's Product Number
- P/N： Everlight Part Number
- QTY：Packing Quantity
- CAT：Luminous Flux (Brightness) Bin
- HUE：Color Bin
- REF：Forward Voltage Bin
- LOT No：Lot Number

• Packing: Loaded Quantity 2000 pcs Per Reel

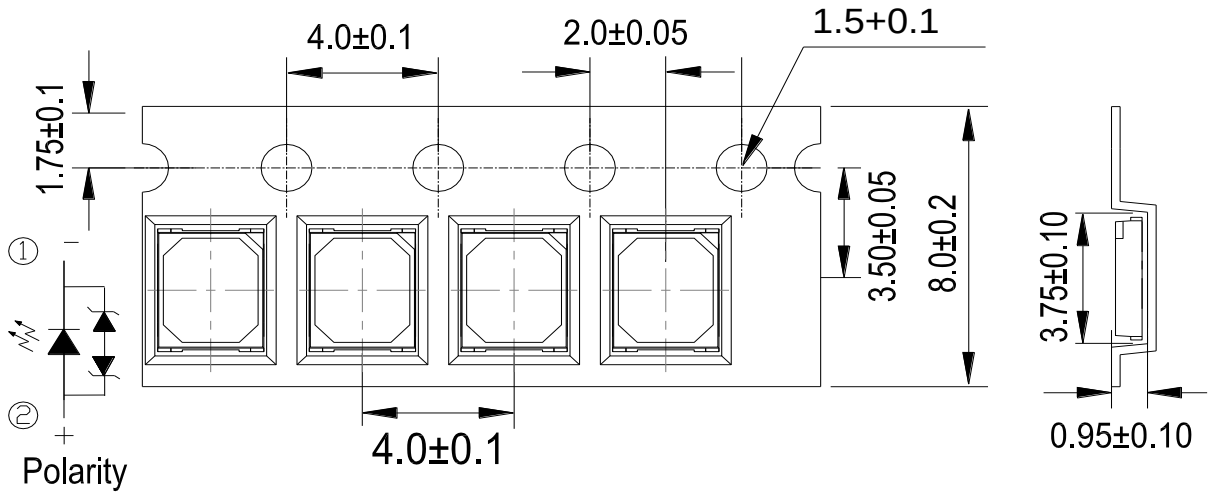

Notes:

Dimensions are in millimeters.

Copyright © 2019, Everlight All Rights Reserved. Release Date: Nov.25.2020 Issue No: DSE-0024137 Ver.2

- **Reel Dimensions**

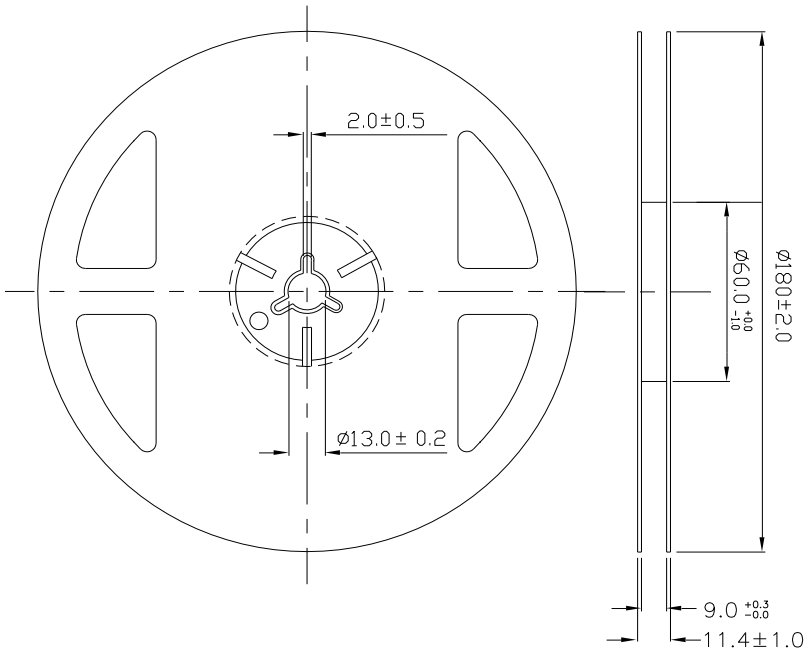

Notes:

Dimensions are in millimeters.

- **Moisture Resistant Packing Process**

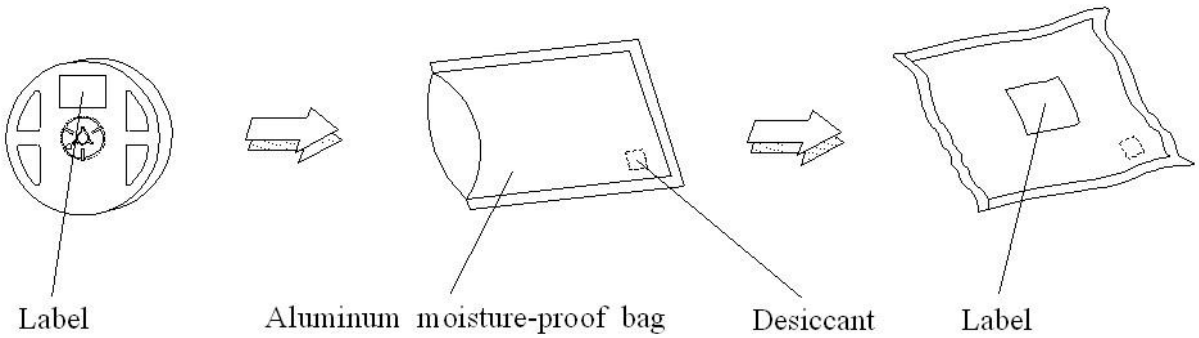

Copyright © 2019, Everlight All Rights Reserved. Release Date: Nov.25.2020 Issue No: DSE-0024137 Ver.2

11. Precaution for Use

1. Over-current-proof
   Customer must apply resistors for protection; otherwise slight voltage shift will cause big current change (burn out will happen).

2. Assemblies
   Do not stack assemblies containing LEDs to prevent damage to the optical surface of LEDs. Forces applied to the optical surface may result in the surface being damaged.

3. Soldering Condition
   3.1 When soldering, do not put stress on the LEDs during heating.
   3.2 After soldering, do not warp the circuit board.

4. Soldering Iron
   Each terminal is to go to the tip of soldering iron temperature less than 350℃ for 3 seconds within once in less than the soldering iron capacity 25W. Leave two seconds and more intervals, and do soldering of each terminal. Be careful because the damage of the product is often started at the time of the hand solder.

5. Repairing
   Repair should not be done after the LEDs have been soldered. When repairing is unavoidable, a double-head soldering iron should be used (as below figure). It should be confirmed beforehand whether the characteristics of the LEDs will or will not be damaged by repairing.

Copyright © 2019, Everlight All Rights Reserved. Release Date: Nov.25.2020 Issue No: DSE-0024137 Ver.2

Revision History

Current version: 16.Jan.2026

Issue No: Preliminary

Version: 1

Created by: Ted Zhao

Rev.	Subjects (major change in previous version)	Modified date
1	Preliminary Data Sheet	2026/1/16

Copyright © 2019, Everlight All Rights Reserved. Release Date: Nov.25.2020 Issue No: DSE-0024137 Ver.2