EVERLIGHT AUTOMOTIVE

DATASHEET

EL TOP VIEW LED
67-21R-UR0201H-AM



Features

- Package：PLCC 2 package
- Color：Red
- Typ. Luminance Intensity：1300 mcd @ 20mA
- Viewing angle：120°
- ESD：2KV
- MSL：2
- Qualified AEC-Q102
- Sulfur robustness：Class A1
- The product itself will remain within RoHS compliant version
- Compliance with EU REACH
- Compliance Halogen Free .(Br <900 ppm ,Cl <900 ppm , Br+Cl < 1500 ppm)

Applications

- Automotive interior lighting
- Automotive exterior lighting
- Cluster

Contents

1. Characteristics 3
2. Absolute Maximum Ratings 4
3. Characteristics Graph 5
4. Binning Information 10
5. Part Number 13
6. Ordering Information 14
7. Mechanical Dimension 15
8. Recommended Soldering Pad 16
9. Reflow Soldering Profile 16
10. Packaging Information 17
11. Precaution for Use 19

Copyright © 2020, Everlight All Rights Reserved. Release Date: 17.Jul.2025 Issue No: DSE-0022867_Rev1

1. Characteristics

Parameter		Symbol	Min.	Typ.	Max.	Unit	Condition
Forward Current		I_F	5	20	50	mA	---
Luminous Intensity		I_V	900	1400	2240	mcd	I_F=20mA
Forward Voltage		V_F	1.75	2.00	2.75	V	I_F=20mA
Viewing Angle		φ	---	120	---	deg	I_F=20mA
Dominant Wavelength		λ_d	612	---	627	nm	I_F=20mA
Thermal Resistance (Junction to Solder)	Real	$R_{th\ JS\ real}$	---	120	160	K/W	I_F=20mA
	Electrical	$R_{th\ JS\ el}$	---	100	120		

Notes:

1. Luminous Flux measurement tolerance: ±8%.
2. The data of Luminous Flux measured at thermal pad=25°C
3. Forward voltage measurement tolerance: ±0.05V
4. Tolerance of Dominant Wavelength：±1nm.
5. Current pulse time :25ms

Copyright © 2020, Everlight All Rights Reserved. Release Date: 17.Jul.2025 Issue No: DSE-0022867_Rev1

2. Absolute Maximum Ratings

Parameter	Symbol	Ratings	Unit
Power Dissipation	P_d	137	mW
Forward Current	I_F	50	mA
Surge Current (t<=10 μs; D=0.005; T_s=25 ℃)	I_{FM}	100	mA
Reverse Voltage	V_R	Not designed for reverse operation	V
Junction Temperature	T_J	125	°C
Operating Temperature	T_{opr}	-40 ~ +110	°C
Storage Temperature	T_{stg}	-40 ~ +110	°C
ESD Sensitivity (R=1.5kΩ, C= 100pF)	ESD_{HBM}	2	kV
Soldering Temperature	Reflow	260°C for 30sec	°C

Copyright © 2020, Everlight All Rights Reserved. Release Date: 17.Jul.2025 Issue No: DSE-0022867_Rev1

3. Characteristics Graph

Wavelength Characteristics Relative Spectral Distribution

@ Ts = 25°C, I_F=20mA

$$\Phi_V/\Phi_V\,(Max.) = f(\lambda)$$

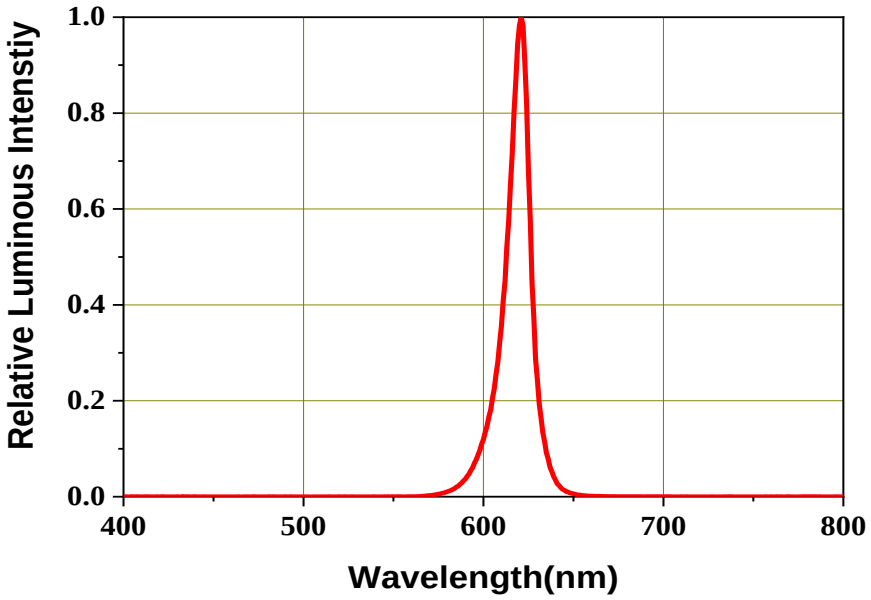

Typical Diagram Characteristics of Radiation

$$\Phi_V/\Phi_V\,(0^\circ) = f(\varphi)$$

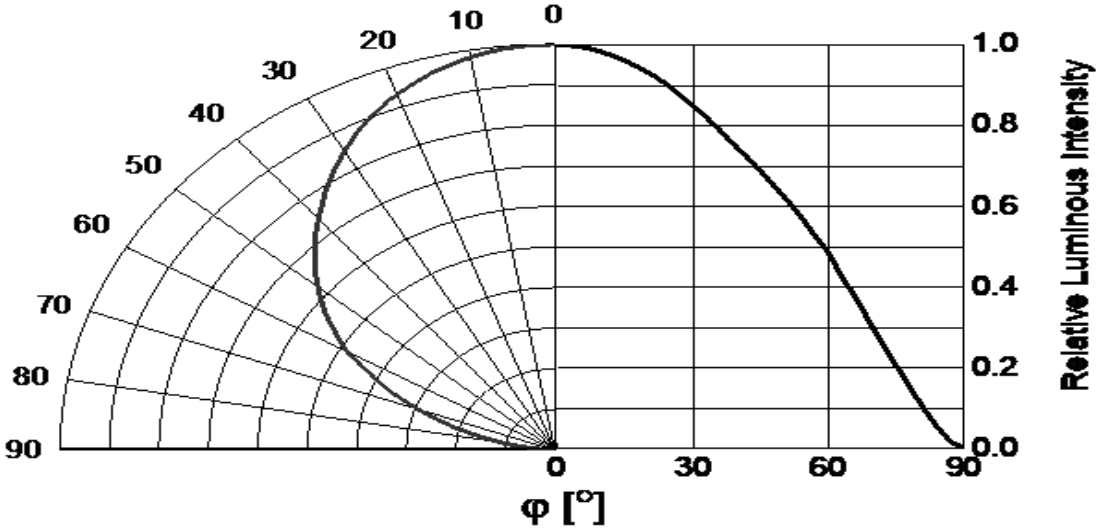

Notes:

1. φ is the off axis angle from lamp centerline where the luminous intensity is 1/2 of the peak value.
2. View angle tolerance is ± 5°.

Copyright © 2020, Everlight All Rights Reserved. Release Date: 17.Jul.2025 Issue No: DSE-0022867_Rev1

Forward Current vs. Forward Voltage

@ Ts = 25°C

$$I_F = f(V_F)$$

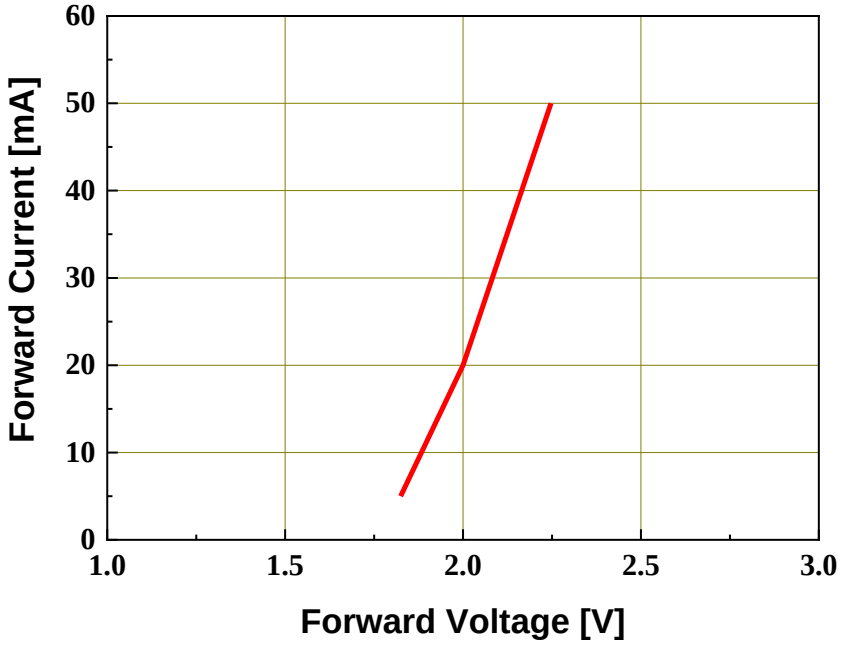

Relative Luminous Intensity vs. Forward Current

@ Ts = 25°C

$$\Phi_V / \Phi_V(20mA) = f(I_F)$$

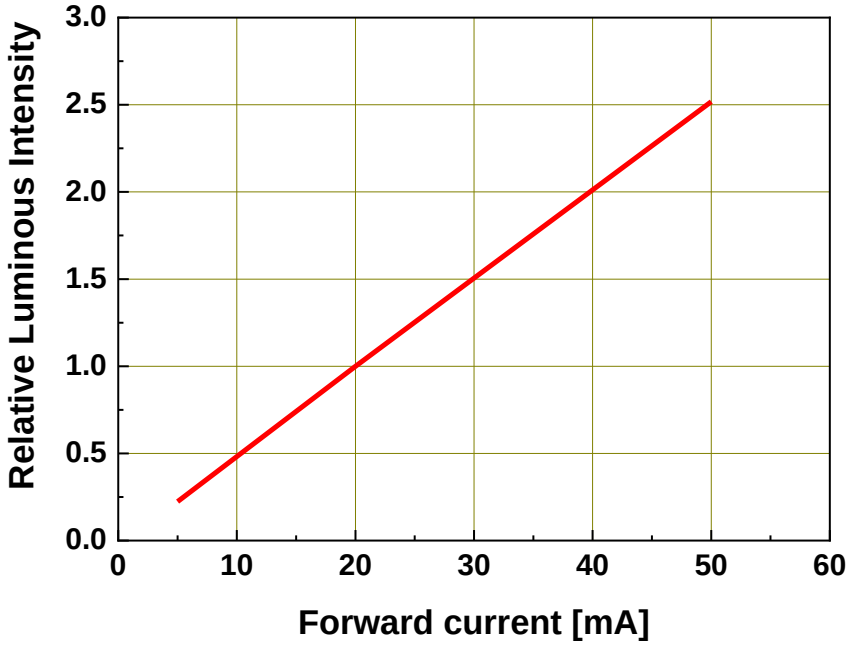

Copyright © 2020, Everlight All Rights Reserved. Release Date: 17.Jul.2025 Issue No: DSE-0022867_Rev1

Dominant Wavelength shift vs. Forward Current

@ Ts = 25°C

$$\Delta\lambda_d = \lambda_d - \lambda_d(20\text{mA}) = f(I_F)$$

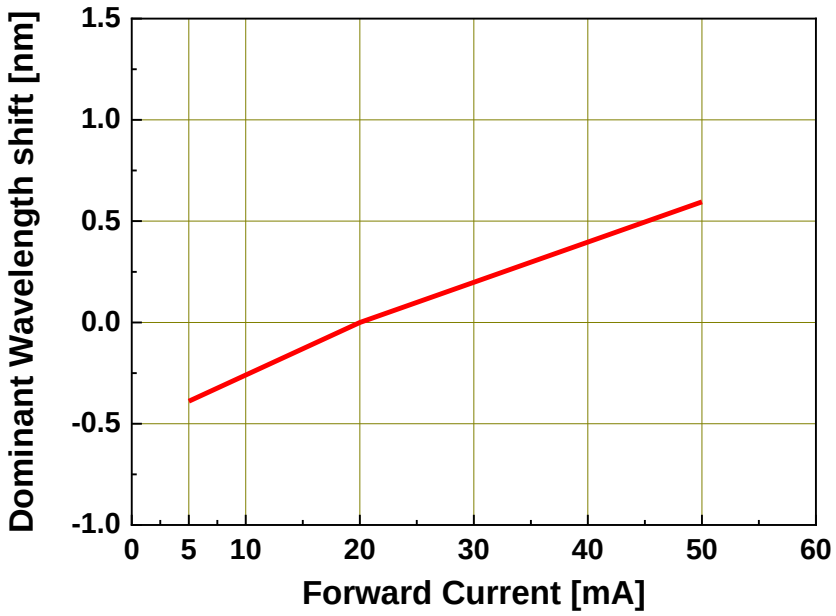

Relative Forward Voltage vs. Junction Temperature

@ I_F=20mA

$$\Delta V_F = V_F - V_F(25^\circ C) = f(T_j)$$

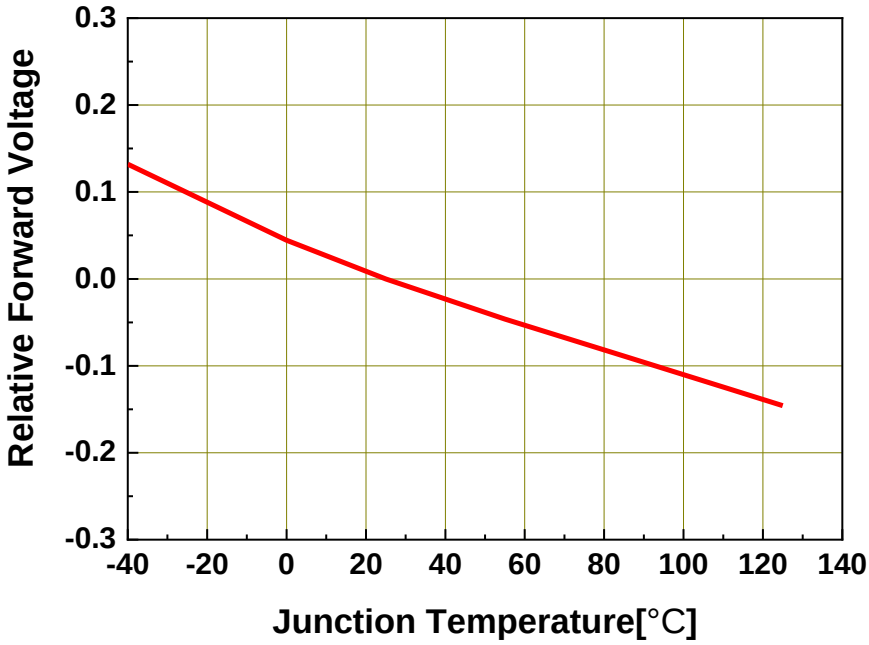

Copyright © 2020, Everlight All Rights Reserved. Release Date: 17.Jul.2025 Issue No: DSE-0022867_Rev1

Relative Luminous Intensity vs. Junction Temperature

@ I_F=20mA

$$\Phi_V / \Phi_V(25^\circ C) = f(T_j)$$

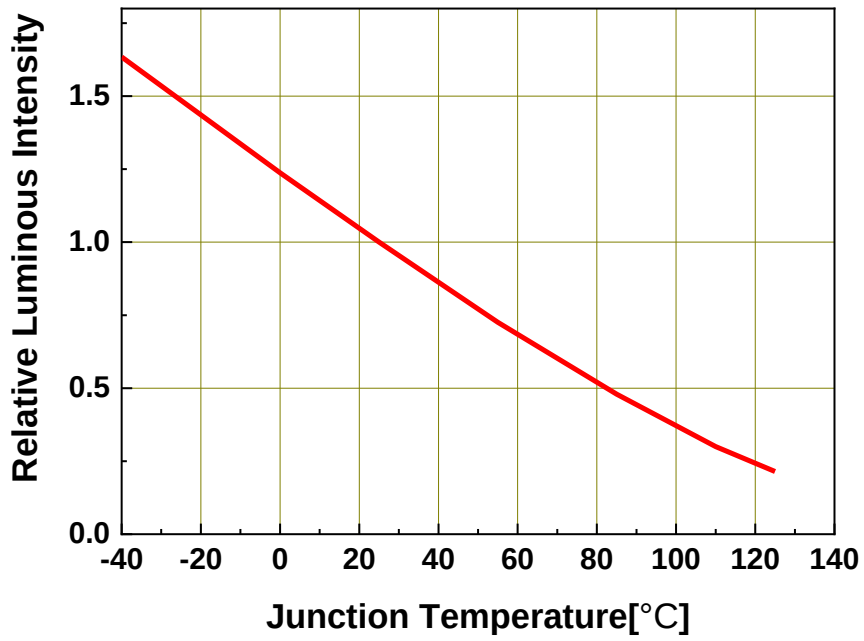

Relative Wavelength Shift vs. Junction Temperature

@ I_F=20mA

$$\Delta\lambda_d = \lambda_d - \lambda_d(25^\circ C) = f(T_j)$$

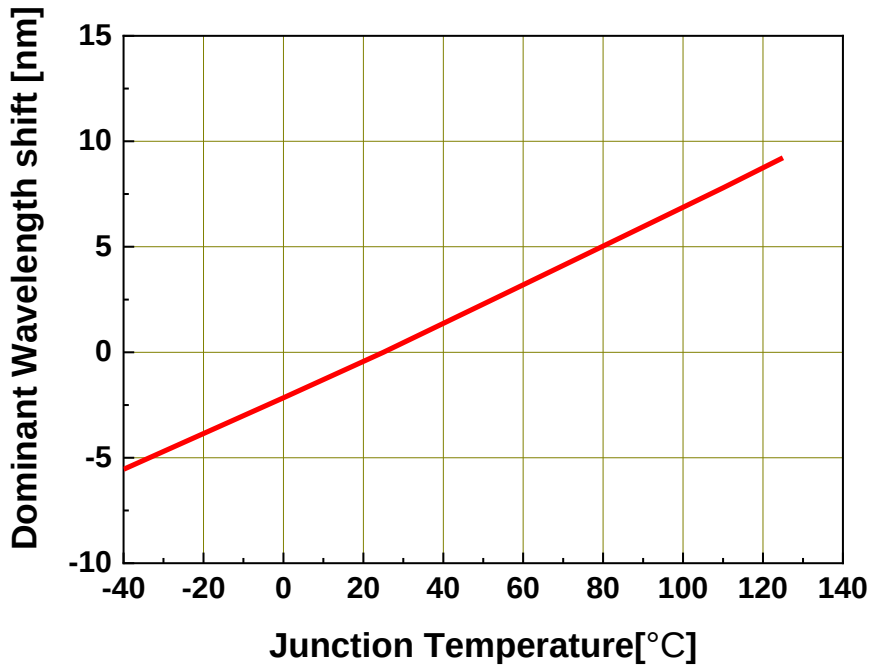

Copyright © 2020, Everlight All Rights Reserved. Release Date: 17.Jul.2025 Issue No: DSE-0022867_Rev1

Forward Current Derating Curve

$I_F = f(T_S)$

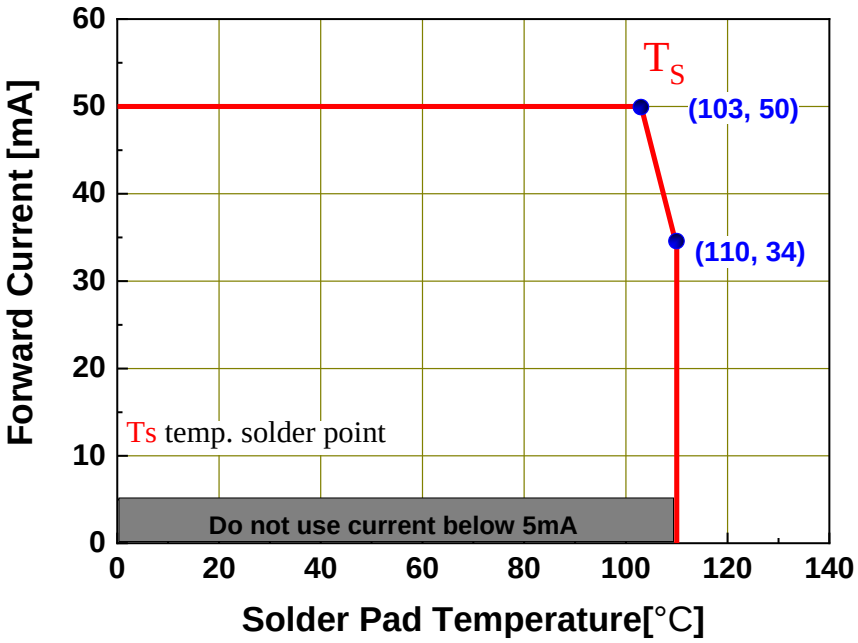

Permissible Pulse Handling Capability

D=Duty cycle , Ts = 25℃

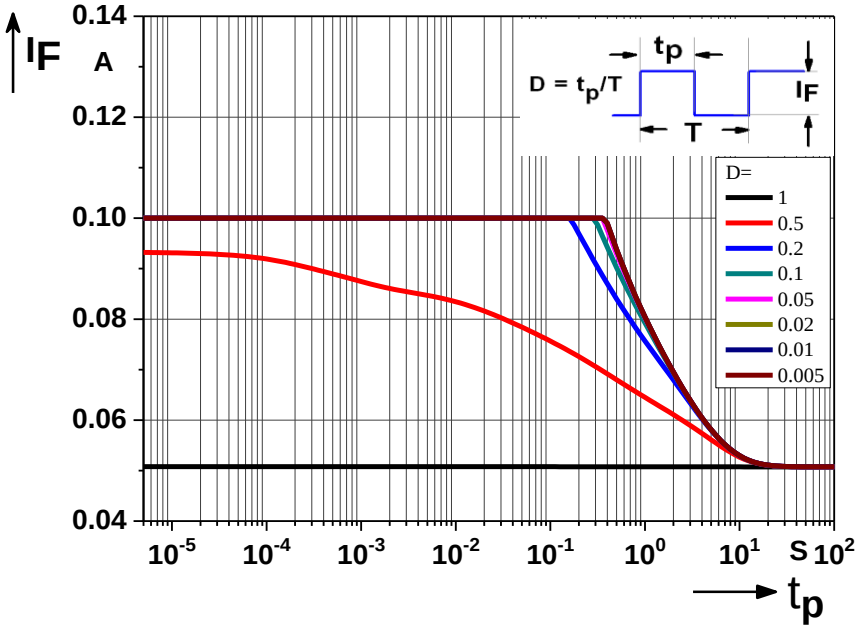

Copyright © 2020, Everlight All Rights Reserved. Release Date: 17.Jul.2025 Issue No: DSE-0022867_Rev1

4. Binning Information

Luminous Intensity Bins

Group Bin	Luminous Intensity (mcd)		Luminous flux (lm)(for reference)	
	Min.	Max.	Min.	Max.
V2	900	1120	2.83	3.52
AA	1120	1400	3.52	4.40
AB	1400	1800	4.40	5.66
BA	1800	2240	5.66	7.04

Notes:

1. Luminous flux measurement tolerance: ±8%.
2. Test current: Typical forward current
3. Current pulse time: 25ms

Dominant Wavelength Bins

Group Bin	Minimum Dominant Wavelength [nm]	Maximum Dominant Wavelength [nm]
1215	612	615
1518	615	618
1821	618	621
2124	621	624
2427	624	627

Notes:

1. Dominant wavelength measurement tolerance: ±1nm
2. Test current: Typical forward current
3. Current pulse time: 25ms

Copyright © 2020, Everlight All Rights Reserved. Release Date: 17.Jul.2025 Issue No: DSE-0022867_Rev1

Forward Voltage Bins

Bin code	Min Forward Voltage [V]	Max Forward Voltage [V]
1720	1.75	2.00
2022	2.00	2.25
2225	2.25	2.50
2527	2.50	2.75

Notes:

1. Forward voltage measurement tolerance: ±0.05V
2. Test current: Typical forward current
3. Current pulse time: 25ms

Copyright © 2020, Everlight All Rights Reserved. Release Date: 17.Jul.2025 Issue No: DSE-0022867_Rev1

5. Part Number

67-21R-UR0201H-AM

Part number is designated with below details.

67-21 = Product family name.

R = Reverse polarity

UR = Color [1]

020 = Test current [mA]

1 = Lead Frame Type

H = Brightness Level (H=High ; M=Medium ; L=Low)

AM = Automotive application

Note

[1] Color :

Symbol	Description
C	Cool White
N	Neutral White
W	Warm White
PA	Phosphor Converted Amber
PR	Phosphor Converted Red
UB	Blue
IB	Ice Blue
SB	Sky Blue
UP	Purple
UG	Green
UY	Yellow
UYG	Brilliant Yellow Green
UPG	Pale Green
UA	Amber
UR	Red
SR	Super Red
RGB	RGB-Color
PYG	Phosphor Converted Yellow Green

Copyright © 2020, Everlight All Rights Reserved. Release Date: 17.Jul.2025 Issue No: DSE-0022867_Rev1

6. Ordering Information

67-21R-UR0201H-ABCDEFGHJKLM-NO-AM

Part Number of the 67-21	Order Code
67-21R-UR0201H-AM	67-21R-UR0201H-ABCDEFGHJKLM-NO-AM

Order code contains information with below details：

ABCD = min/max wavelength or CCT

EFGH = min./max. luminous flux in [lm] or luminous intensity in [mcd]

JKLM = min./max. forward voltage

NO = internal code

AM = Automotive Application

Copyright © 2020, Everlight All Rights Reserved. Release Date: 17.Jul.2025 Issue No: DSE-0022867_Rev1

7. Mechanical Dimension

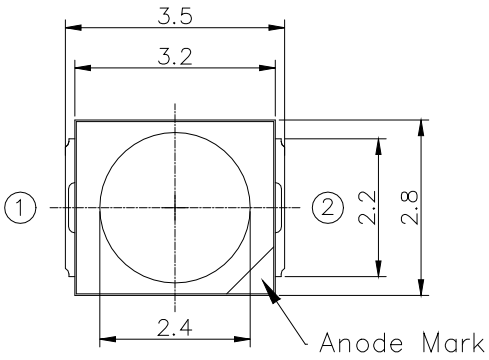

Top view

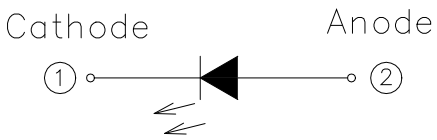

Polarity

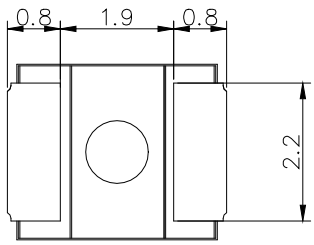

Bottom view

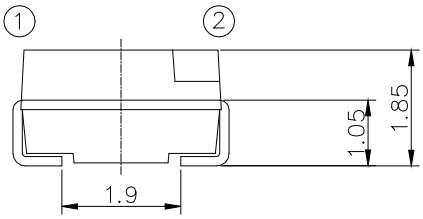

Side view

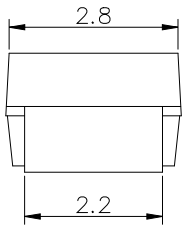

Side view

Notes:

1. Dimensions are in millimeters.
2. Tolerances unless mentioned are ± 0.1mm.

Copyright © 2020, Everlight All Rights Reserved. Release Date: 17.Jul.2025 Issue No: DSE-0022867_Rev1

8. Recommended Soldering Pad

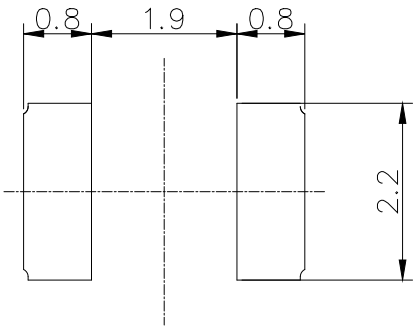

9. Reflow Soldering Profile

Soldering Condition (Reference: IPC/JEDEC J-STD-020D)

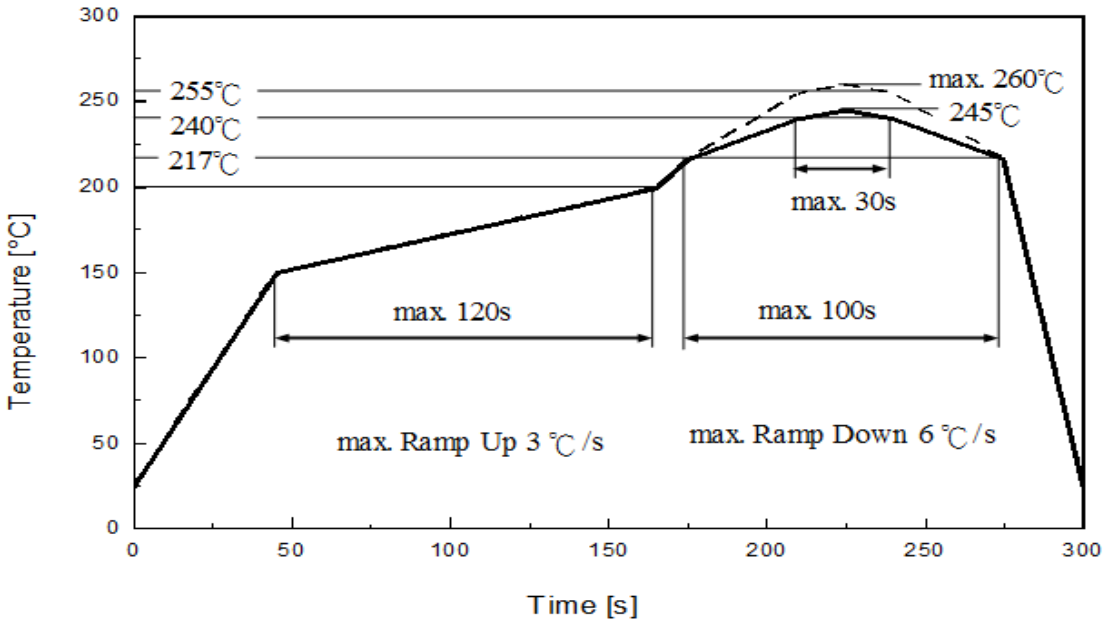

Profile Feature	Pb-Free Assembly Recommendation	Unit
Ramp-up rate to preheat 25 °C to 150 °C	3	°C /sec
Time of soaking zone 150 °C to 200 °C	120	sec
Ramp-up rate to peak	3	°C /sec
Liquidus temperature	217	°C
Time above liquidus temperature	100	sec
Peak temperature (max.)	260	°C
Time within 5°C of the specified peak temperature	30	sec
Ramp-down Rate (max.)	6	°C /sec

Copyright © 2020, Everlight All Rights Reserved. Release Date: 17.Jul.2025 Issue No: DSE-0022867_Rev1

10. Packaging Information

• Product Labeling



- CPN：Customer's Product Number
- P/N ： Everlight Part Number
- QTY：Packing Quantity
- CAT：Luminous Flux (Brightness) Bin
- HUE：Color Bin
- REF：Forward Voltage Bin
- LOT No：Lot Number

• Packing: Loaded Quantity 2000 pcs Per Reel

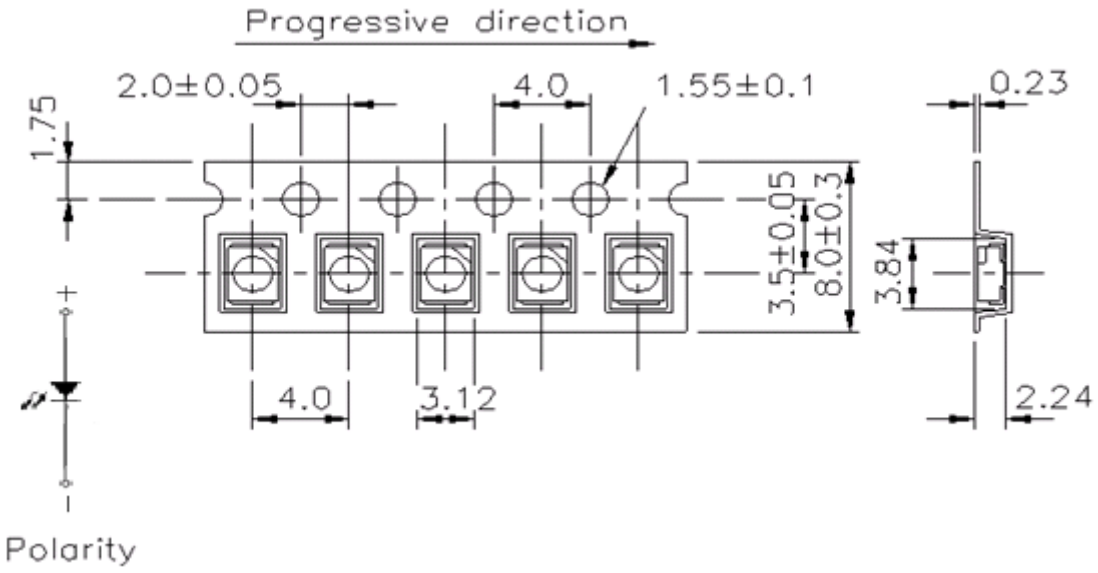

Notes:

1. Dimensions are in millimeters.
2. Tolerances unless mentioned are ±0.2mm.

Copyright © 2020, Everlight All Rights Reserved. Release Date: 17.Jul.2025 Issue No: DSE-0022867_Rev1

• Reel Dimensions

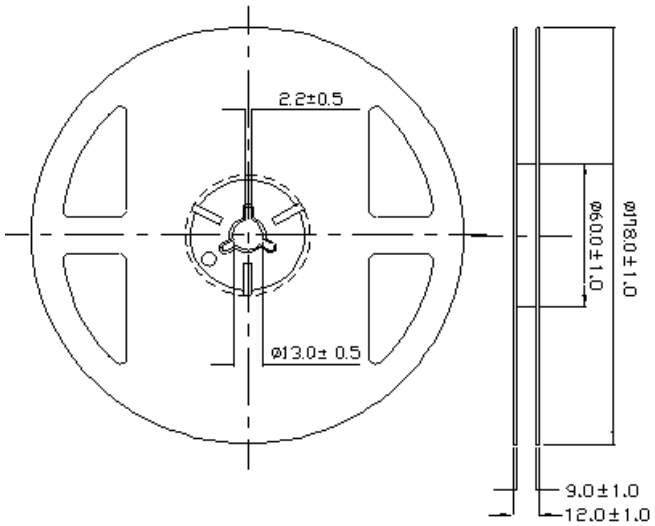

Notes:

3. Dimensions are in millimeters.
4. Tolerances unless mentioned are ±0.2mm.

• Moisture Resistant Packing Process

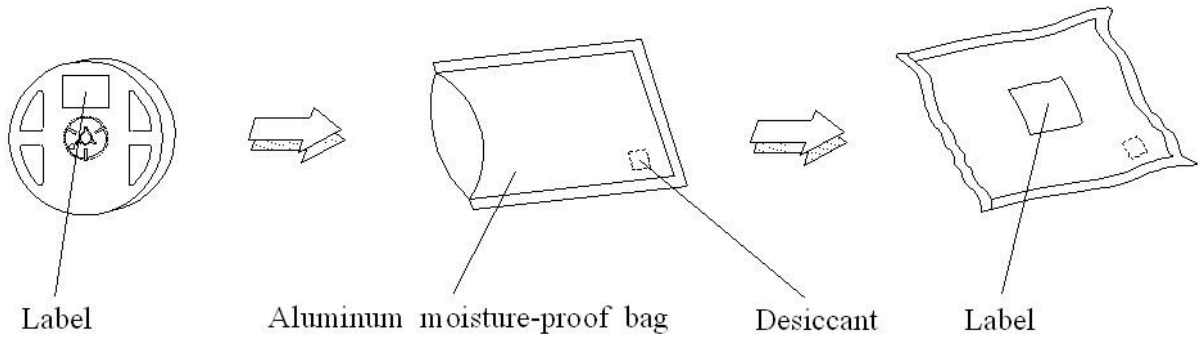

Notes:

1. Dimensions are in millimeters.
2. Tolerances unless mentioned are ±0.2mm.

Copyright © 2020, Everlight All Rights Reserved. Release Date: 17.Jul.2025 Issue No: DSE-0022867_Rev1

11. Precaution for Use

1. Over-current-proof
   Customer must apply resistors for protection; otherwise slight voltage shift will cause big current change (burn out will happen).

2. Assemblies
   Do not stack assemblies containing LEDs to prevent damage to the optical surface of LEDs. Forces applied to the optical surface may result in the surface being damaged.

3. Soldering Condition
   3.1 When soldering, do not put stress on the LEDs during heating.
   3.2 After soldering, do not warp the circuit board.

4. Soldering Iron
   Each terminal is to go to the tip of soldering iron temperature less than 350℃ for 3 seconds within once in less than the soldering iron capacity 25W. Leave two seconds and more intervals, and do soldering of each terminal. Be careful because the damage of the product is often started at the time of the hand solder.

5. Repairing
   Repair should not be done after the LEDs have been soldered. When repairing is unavoidable, a double-head soldering iron should be used (as below figure). It should be confirmed beforehand whether the characteristics of the LEDs will or will not be damaged by repairing.

Copyright © 2020, Everlight All Rights Reserved. Release Date: 17.Jul.2025 Issue No: DSE-0022867_Rev1

12. Sulfur Test Criteria

Products	Failure Criteria
Exterior Lighting products	Luminous Flux +/-20%, forward voltage +/-10%, color coordinates x,y +/-0.01, color wavelength +/- 2 nm Visual defect issue following Everlight's inspection criteria
Interior lighting products	Luminous Flux +/-30% or +/-50% for some application, forward voltage +/-10%, color coordinates x,y +/-0.02, color wavelength +/- 2 nm Visual defect issue following Everlight's inspection criteria
Grade of H2S and FMG test	Please refer to the table as below. As for discolor, please refer to the Frame blackening after Grade of H2S and FMG test defect under Everlight's inspection criteria

	Grade A0	Grade A1	Grade B0	Grade B1
C12 H2S Class A C13 FMG	No corrosion	Corrosion without the impact on reliability and life time, following AEC-Q102 rev. A		
C12 H2S Class B C13 FMG			No corrosion	Corrosion without the impact on reliability and life time, following AEC-Q102 rev. A

Class for H2S Test & FMG	Description	
	H2S	FMG
Class A	15 ppm with duration 336 h at 40 °C and 90% RH.	Duration 500 h at 25 °C and 75% RH. H2S concentration: 10ppb SO2 concentration: 200ppb NO2 concentration: 200ppb Cl2 concentration: 10ppb
Class B	10 ppm with duration 500 h at 25 °C and 75% RH.	

Class for H2S Test & FMG	Description
0	No corrosion found
1	Corrosion without the impact on reliability and life time, following AEC-Q102 rev. A

Copyright © 2020, Everlight All Rights Reserved. Release Date: 17.Jul.2025 Issue No: DSE-0022867_Rev1

Revision History

Current version:17.Jul.2025

Issue No: DSE-0022867

Version: 1

Created by: Howard Deng

Rev.	Subjects (major change in previous version)	Modified date
1	DSE-0022867	2025/7/17

Copyright © 2020, Everlight All Rights Reserved. Release Date: 17.Jul.2025 Issue No: DSE-0022867_Rev1