EVERLIGHT AUTOMOTIVE

DATASHEET

EL TOP VIEW LED
67-63L-RGB0200H-A04-2T-AM



Features

- Package：PLCC 6 package
- Color：Red , Green, and Blue
- Typ. Luminance Intensity：Red 900 mcd, Green 2200 mcd, Blue 320 mcd @20mA
- Viewing angle：120°
- ESD：up to 2KV
- MSL：3
- Qualifications : According to AEC-Q102
- Corrosion Robustness Class B1
- The product itself will remain within RoHS compliant version
- Compliance with EU REACH
- Compliance Halogen Free .(Br <900 ppm ,CI <900 ppm , Br+Cl < 1500 ppm)

Applications

- Automotive interior lighting.
- Ambient light.
- Switches.

Contents

1. Characteristics 3
2. Absolute Maximum Ratings 4
3. Characteristics Graph 5
4. Binning Information 14
5. Part Number 17
6. Ordering Information 18
7. Mechanical Dimension 19
8. Recommended Soldering Pad 20
9. Reflow Soldering Profile 20
10. Packaging Information 21
11. Precaution for Use 23
12. Sulfur test criteria 24

Copyright ©2021, Everlight All Rights Reserved. Release Date:15.July.2025 Issue No: DSE-000 Rev 1

1. Characteristics

Parameter			Symbol	Min.	Typ.	Max.	Unit	Condition
Forward Current		Red	I_F	5	20	50	mA	---
		Green		3	20	30		
		Blue		3	20	30		
Luminous Intensity		Red	I_V	560	750	1120	mcd	I_F=20mA
		Green		1400	2200	2800		
		Blue		224	280	450		
Forward Voltage		Red	V_F	1.75	1.95	2.75	V	I_F=20mA
		Green		2.5	2.75	3.50		
		Blue		2.5	3.00	3.50		
Viewing Angle		Red	φ	---	120	---	deg	I_F=20mA
		Green		---	120	---		
		Blue		---	120	---		
Dominant Wavelength		Red	λ_d	618	626	630	nm	I_F=20mA
		Green		520	527	535		
		Blue		450	455	458		
Thermal Resistance (Junction to Solder)	Real	Red	$R_{th\ JS\ real}$	---	---	160	K/W	I_F=20mA
		Green		---	---	130		
		Blue		---	---	130		
	Electrical	Red	$R_{th\ JS\ el}$	---	---	125		
		Green		---	---	100		
		Blue		---	---	100		

Notes:

1. Luminous Flux measurement tolerance: ±8%.
2. The data of Luminous Flux measured at thermal pad=25°C
3. Forward voltage measurement tolerance: ±0.05V
4. The V_F range shown in the table above indicates 99% output.
5. Tolerance of Dominant Wavelength：±1nm.

Copyright ©2021, Everlight All Rights Reserved. Release Date:15.July.2025 Issue No: DSE-000 Rev 1

2. Absolute Maximum Ratings

Parameter	Symbol	Ratings			Unit
		Red	Green	Bule	
Power Dissipation	P_d	137	105	105	mW
Forward Current	I_F	50	30	30	mA
Surge Current (t<=10 μs; D=0.005; T_s=25 ℃)	I_{FM}	300	250	250	mA
Reverse Voltage	V_R	Not designed for reverse operation			V
Junction Temperature	T_J	125			°C
Operating Temperature	T_{opr}	-40 ~ +110			°C
Storage Temperature	T_{stg}	-40 ~ +110			°C
ESD Sensitivity (R=1.5kΩ, C= 100pF)	ESD_{HBM}	2	2	2	kV
Soldering Temperature	Reflow	260°C for 30sec			°C

Copyright ©2021, Everlight All Rights Reserved. Release Date:15.July.2025 Issue No: DSE-000 Rev 1

3. Characteristics Graph

Wavelength Characteristics Relative Spectral Distribution
@ Ts = 25°C, I_F=20mA

$$\Phi_V / \Phi_V\,(Max.) = f(\lambda)$$

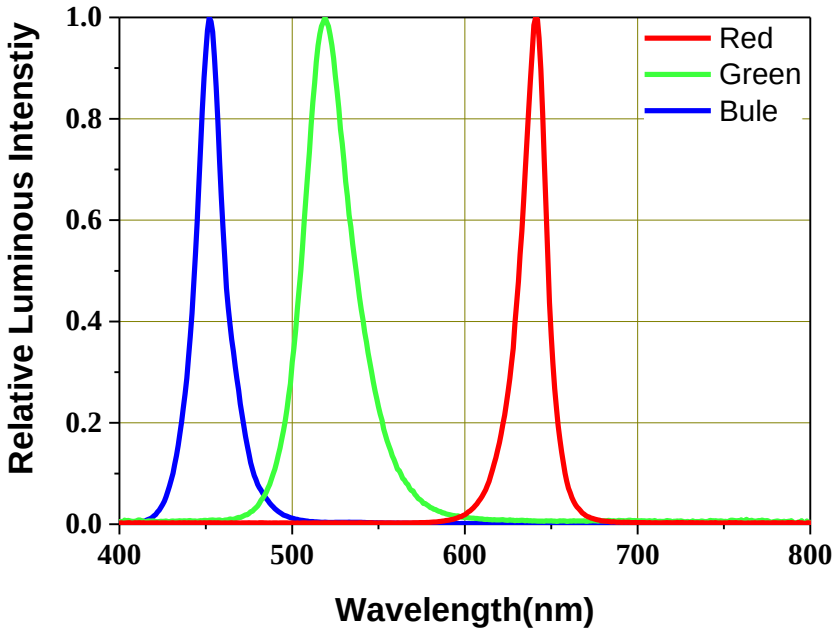

Typical Diagram Characteristics of Radiation (Red)

$$\Phi_V / \Phi_V\,(0^\circ) = f(\varphi)$$

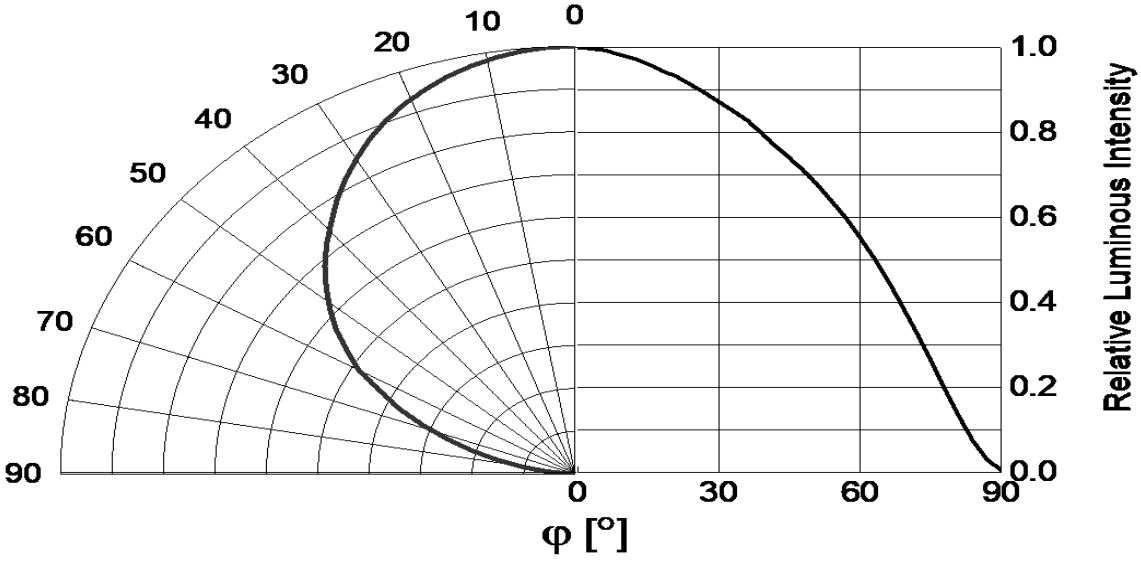

Copyright ©2021, Everlight All Rights Reserved. Release Date:15.July.2025 Issue No: DSE-000 Rev 1

Typical Diagram Characteristics of Radiation (Green)

$$\Phi_V/\Phi_V(0^\circ) = f(\varphi)$$

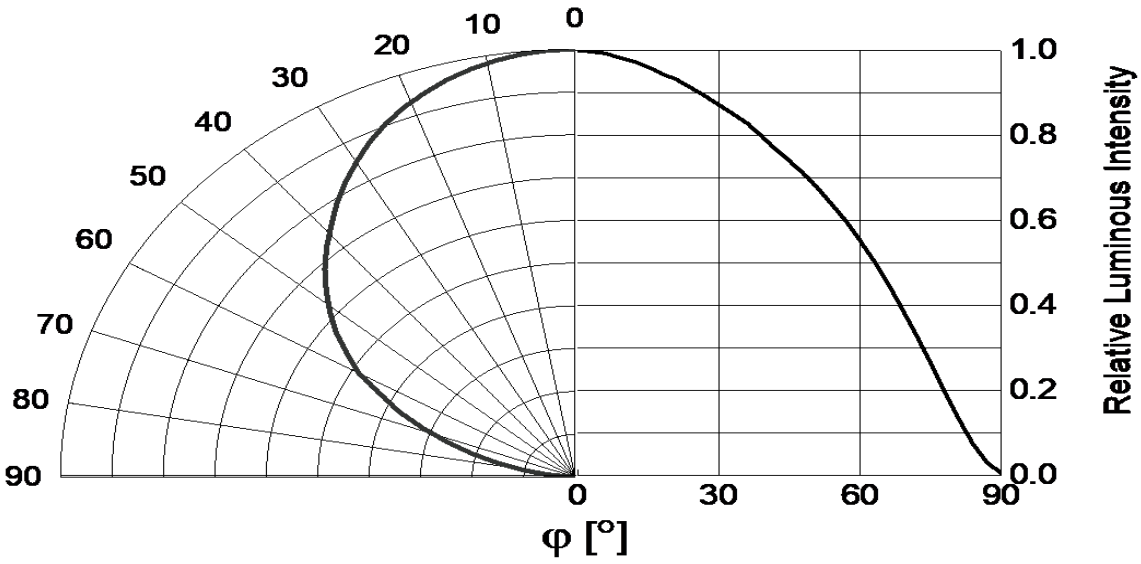

Typical Diagram Characteristics of Radiation (Blue)

$$\Phi_V/\Phi_V(0^\circ) = f(\varphi)$$

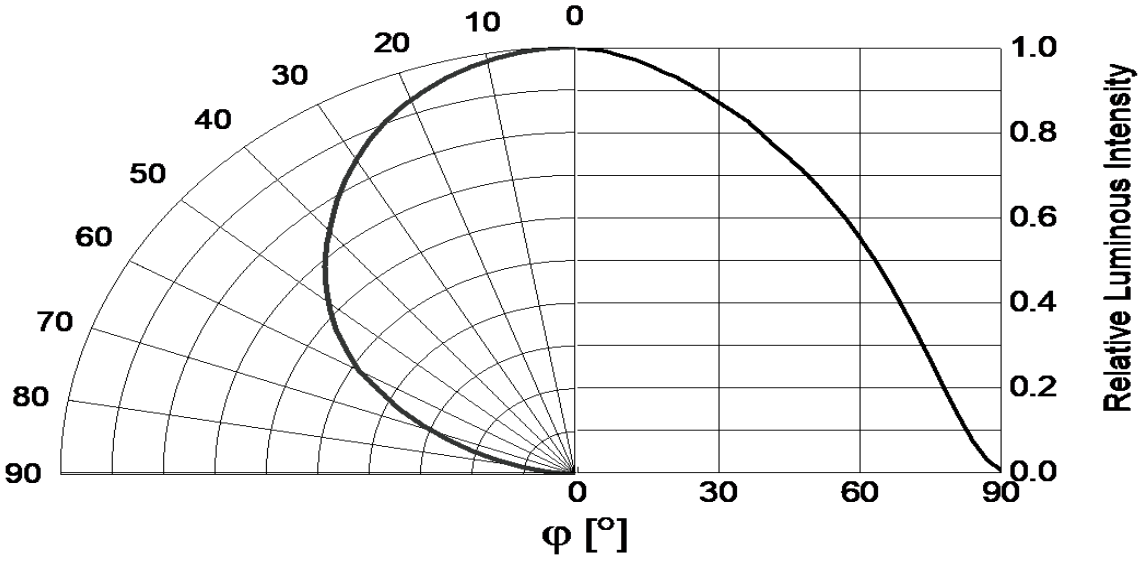

Notes:

1. φ is the off axis angle from lamp centerline where the luminous intensity is 1/2 of the peak value.
2. View angle tolerance is ± 5˚.

Copyright ©2021, Everlight All Rights Reserved. Release Date:15.July.2025 Issue No: DSE-000 Rev 1

Forward Current vs. Forward Voltage
@ Ts = 25°C

$$I_F = f(V_F)$$

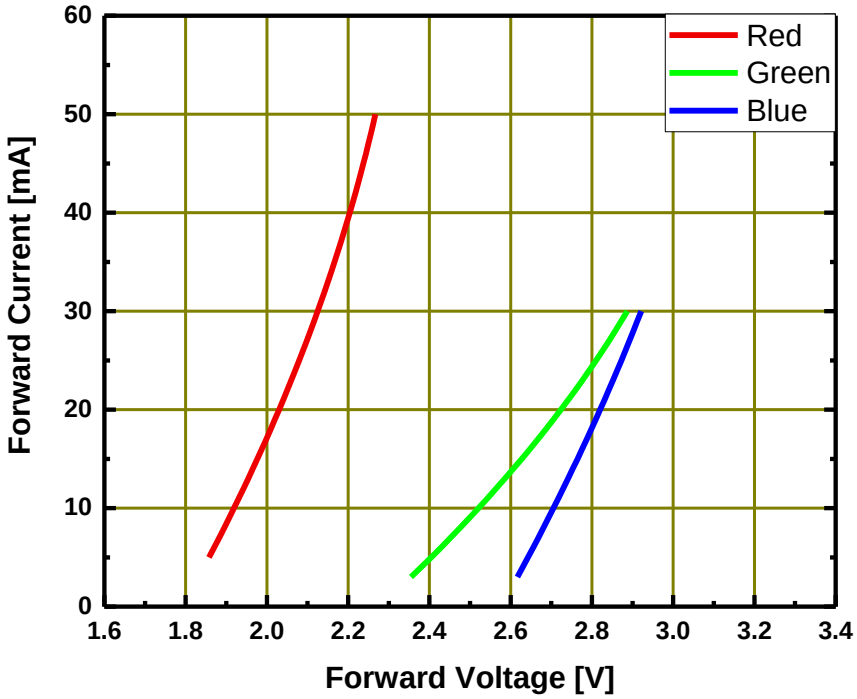

Relative Luminous Intensity vs. Forward Current
@ Ts = 25°C

$$\Phi_V / \Phi_V(20mA) = f(I_F)$$

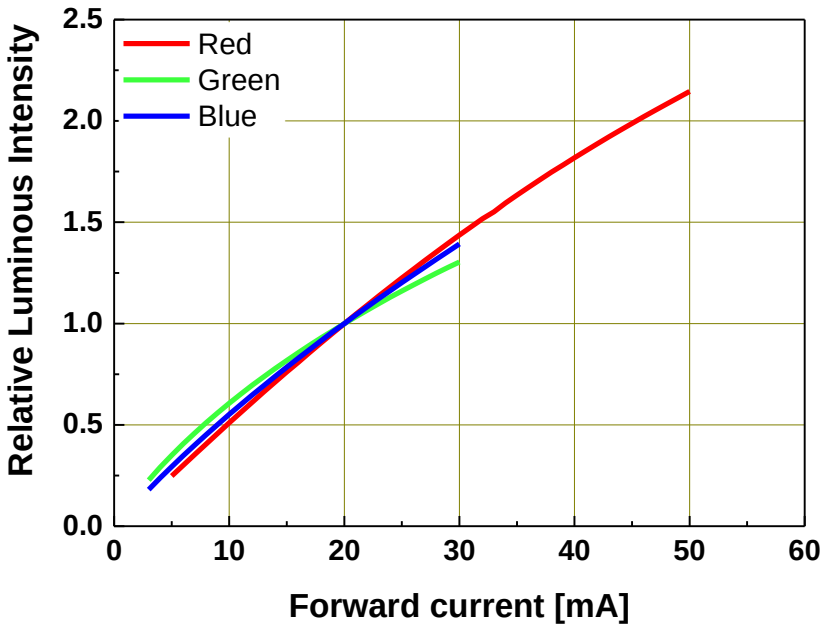

Copyright ©2021, Everlight All Rights Reserved. Release Date:15.July.2025 Issue No: DSE-000 Rev 1

Dominant Wavelength vs. Forward Current (Red)
@ Ts = 25°C

$\lambda_d = f(I_F)$

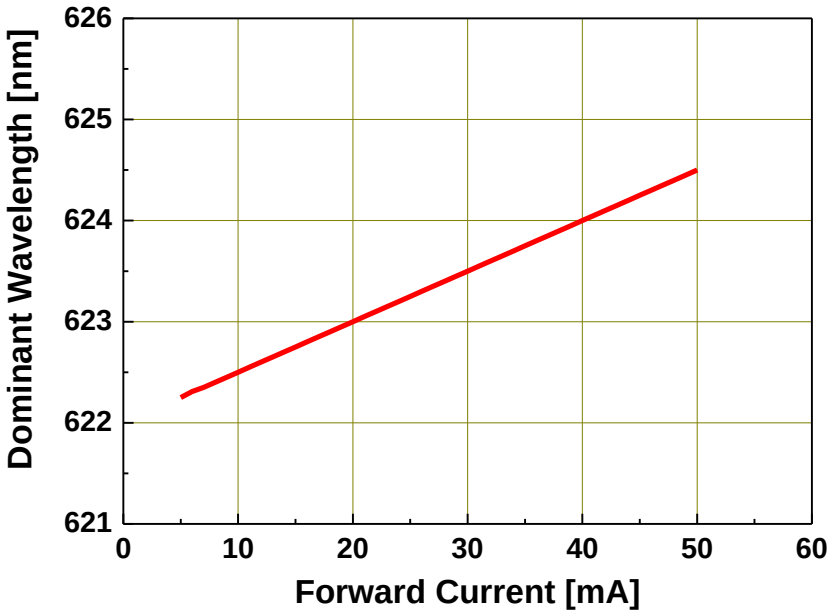

Dominant Wavelength vs. Forward Current (Green)
@ Ts = 25°C

$\lambda_d = f(I_F)$

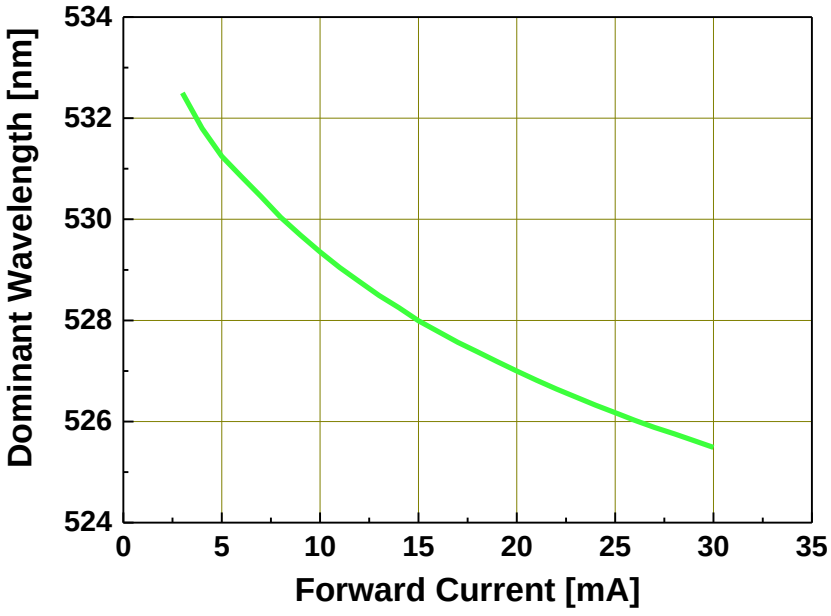

Copyright ©2021, Everlight All Rights Reserved. Release Date:15.July.2025 Issue No: DSE-000 Rev 1

Dominant Wavelength vs. Forward Current (Blue)

@ Ts = 25°C

$$\lambda_d = f(I_F)$$

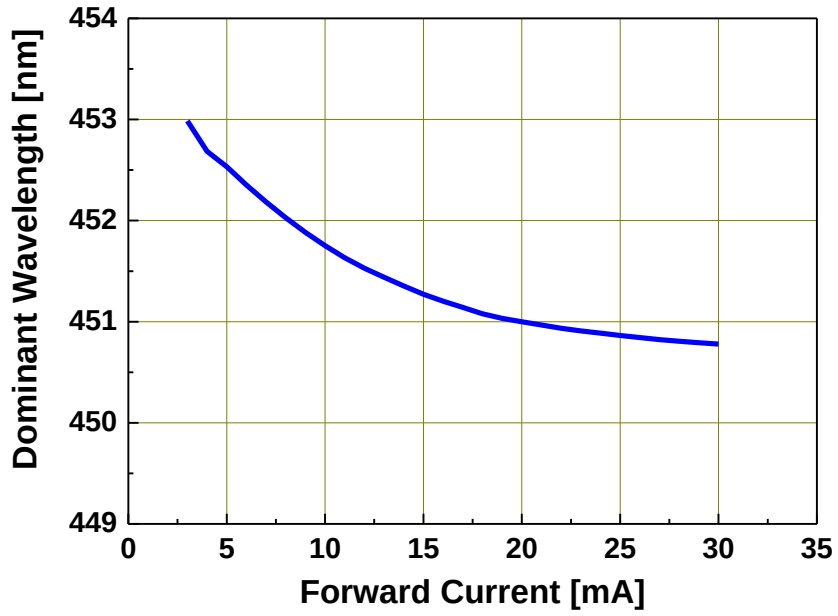

Relative Forward Voltage vs. Junction Temperature

@ I_F=20mA

$$\Delta V_F = V_F - V_F(25^\circ C) = f(T_j)$$

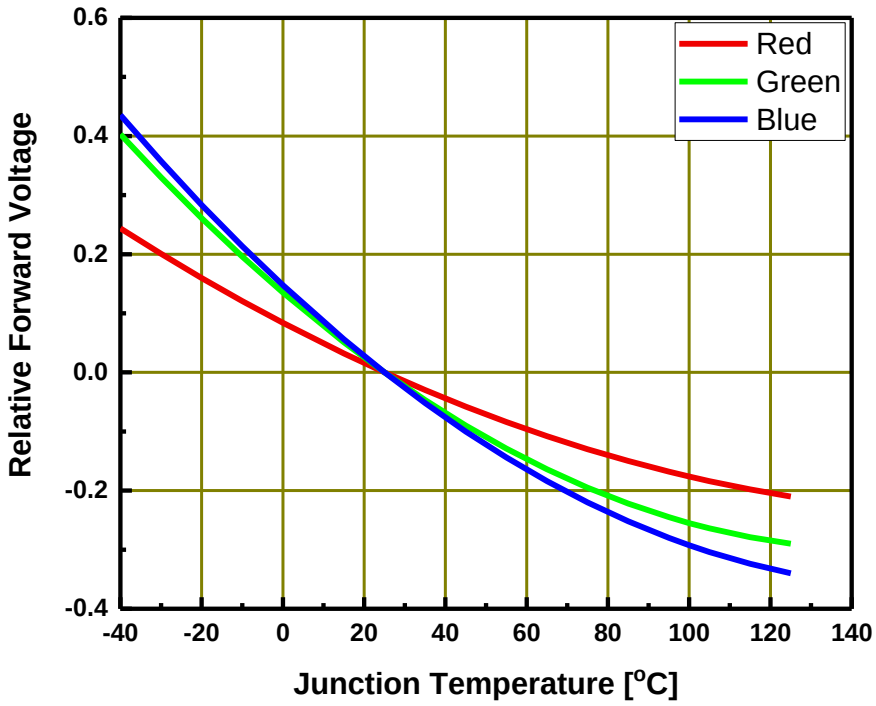

Copyright ©2021, Everlight All Rights Reserved. Release Date:15.July.2025 Issue No: DSE-000 Rev 1

Relative Luminous Intensity vs. Junction Temperature

@ I_F=20mA

$$\Phi_V / \Phi_V(25^\circ C) = f(T_j)$$

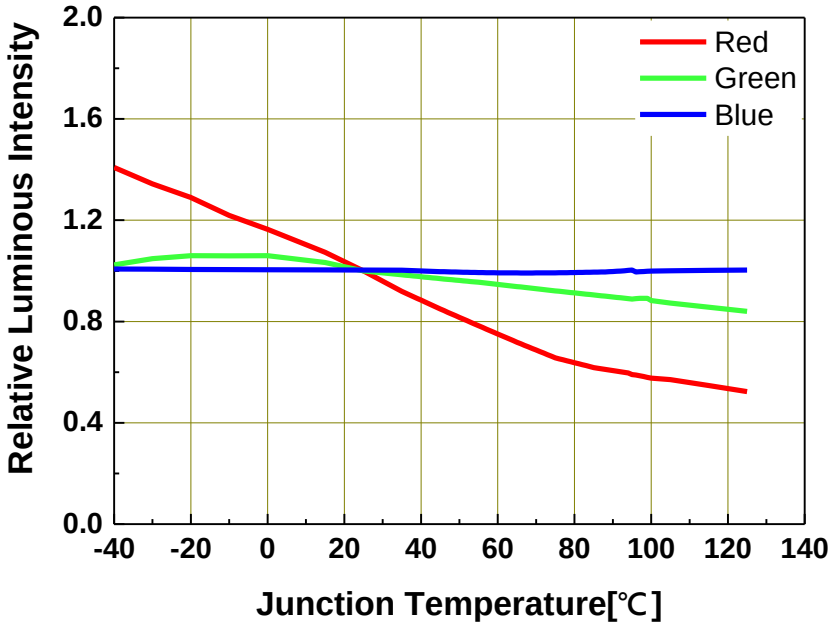

Relative Wavelength Shift vs. Junction Temperature

@ I_F=20mA

$$\Delta\lambda_d = \lambda_d - \lambda_d(25^\circ C) = f(T_j)$$

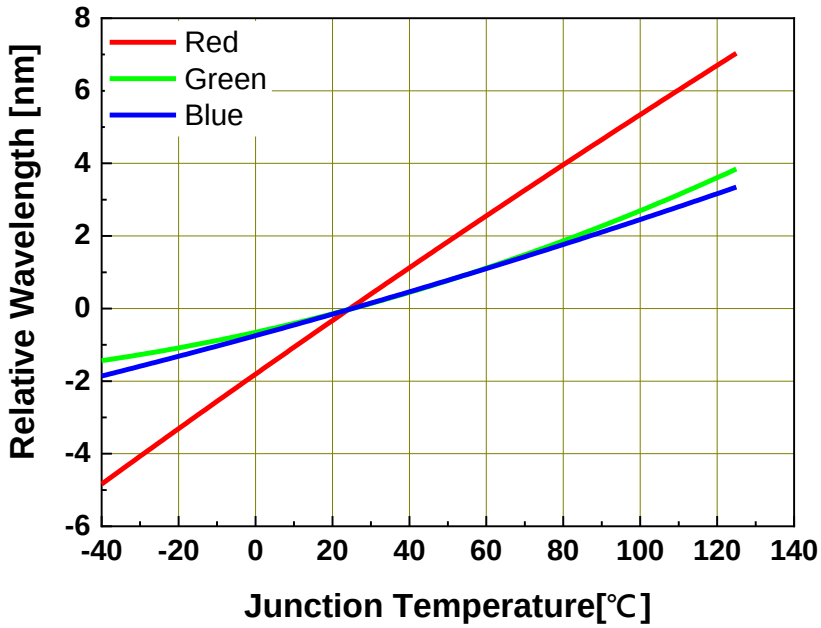

Copyright ©2021, Everlight All Rights Reserved. Release Date:15.July.2025 Issue No: DSE-000 Rev 1

Forward Current Derating Curve (Red)

$$I_F = f(T_S)$$

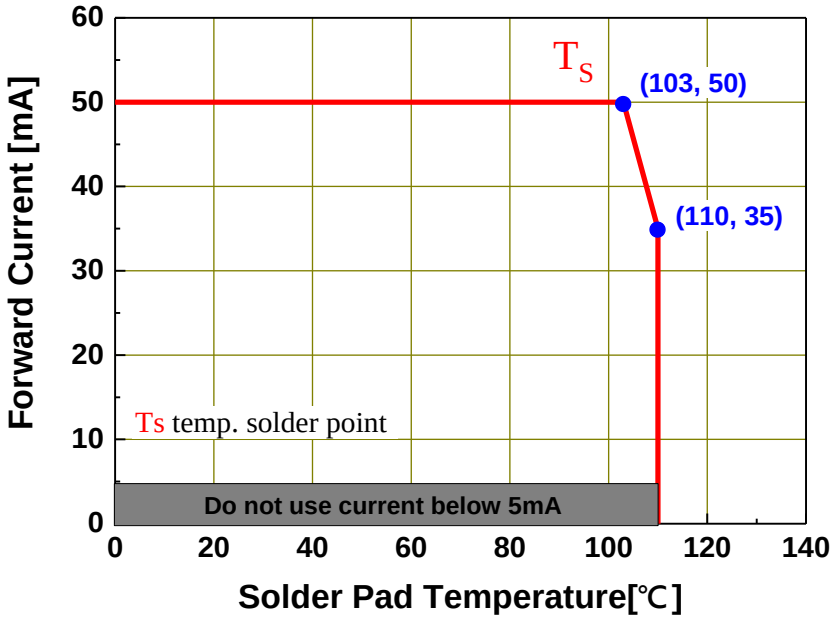

Forward Current Derating Curve (Green)

$$I_F = f(T_S)$$

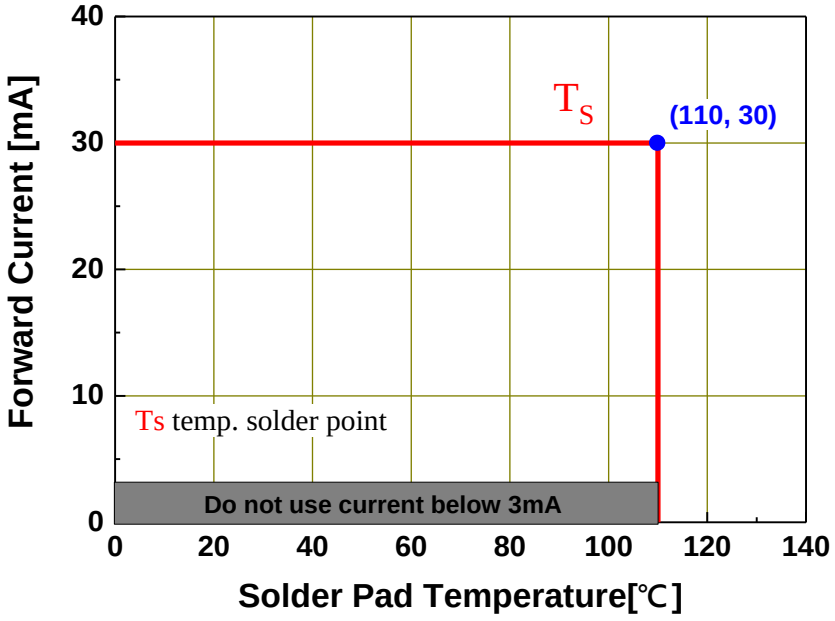

Copyright ©2021, Everlight All Rights Reserved. Release Date:15.July.2025 Issue No: DSE-000 Rev 1

Forward Current Derating Curve (Blue)

$$I_F = f(T_S)$$

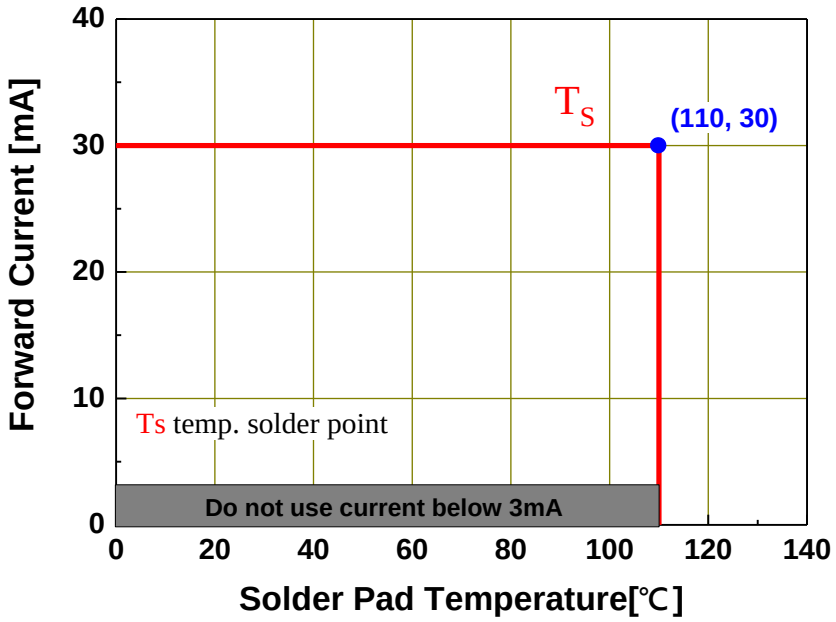

Permissible Pulse Handling Capability (Red)

D=Duty cycle , T_S = 25℃

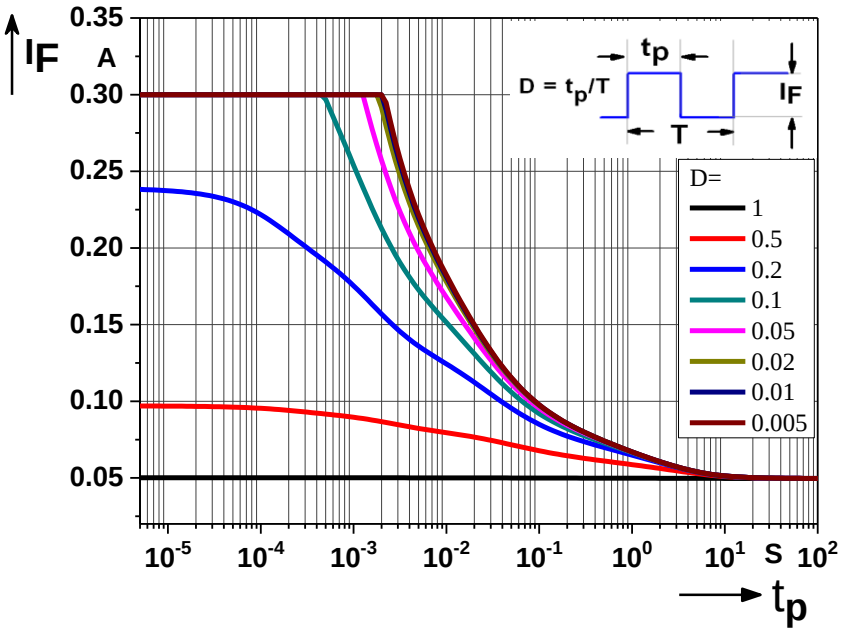

Copyright ©2021, Everlight All Rights Reserved. Release Date:15.July.2025 Issue No: DSE-000 Rev 1

Permissible Pulse Handling Capability (Green)

D=Duty cycle , T_s = 25℃

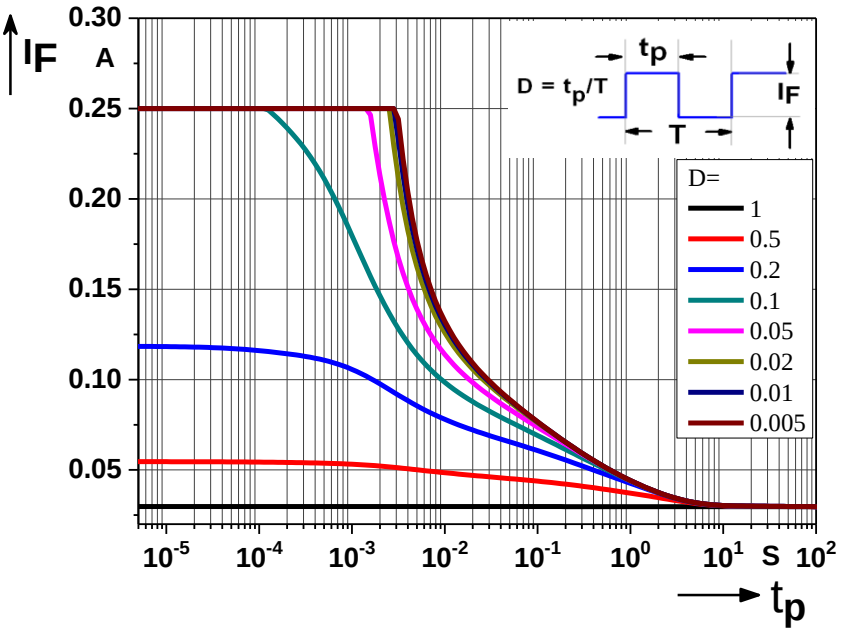

Permissible Pulse Handling Capability (Blue)

D=Duty cycle , T_s = 25℃

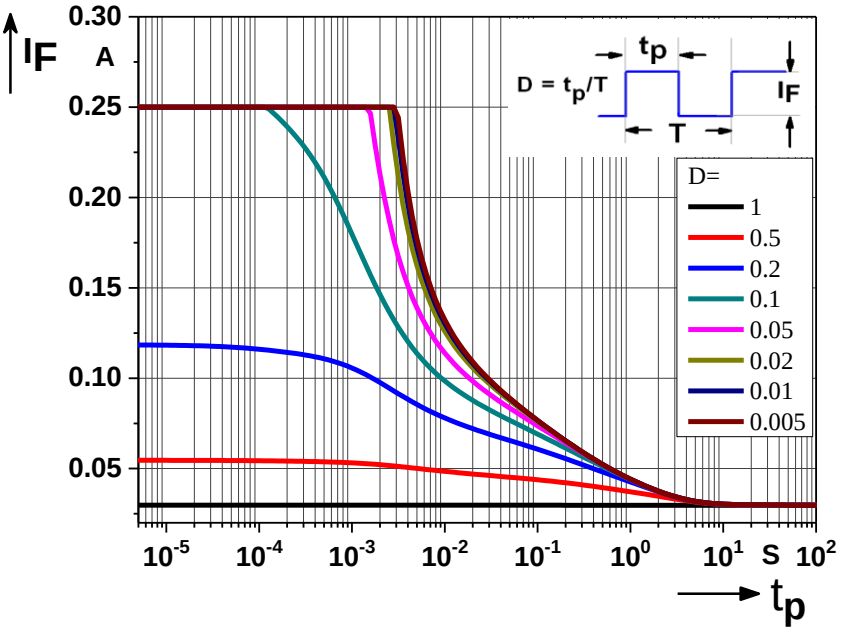

Copyright ©2021, Everlight All Rights Reserved. Release Date:15.July.2025 Issue No: DSE-000 Rev 1

4. Binning Information

Luminous Intensity Bins

Group Bin	Minimum Luminous Intensity (mcd)	Maximum Luminous Intensity (mcd)
L1	11.2	14
L2	14	18
M1	18	22.4
M2	22.4	28
N1	28	35.5
N2	35.5	45
P1	45	56
P2	56	71
Q1	71	90
Q2	90	112
R1	112	140
R2	140	180
S1	180	224
S2	224	280
T1	280	355
T2	355	450
U1	450	560
U2	560	710
V1	710	900
V2	900	1120
AA	1120	1400
AB	1400	1800
BA	1800	2240
BB	2240	2800
CA	2800	3550
CB	3550	4500
DA	4500	5600
DB	5600	7100
EA	7100	9000
EB	9000	11200
FA	11200	14000
FB	14000	18000
GA	18000	22400

Notes:

1. Luminous flux measurement tolerance: ±8%.
2. Highlighted Black Box is possible output bins.

Copyright ©2021, Everlight All Rights Reserved. Release Date:15.July.2025 Issue No: DSE-000 Rev 1

Wavelength Groups

Color	Bin Code	Minimum Dominant Wavelength [nm]	Maximum Dominant Wavelength [nm]
Red	1822	618	622
	2226	622	626
	2630	626	630
	3034	630	634
Green	2025	520	525
	2530	525	530
	3035	530	535
	3540	535	540
Blue	4650	446	450
	5054	450	454
	5458	454	458
	5862	458	462
	6266	462	466
	6670	466	470
	7073	470	473

Notes:

1.Dominant wavelength measurement tolerance: ±1nm

Copyright ©2021, Everlight All Rights Reserved. Release Date:15.July.2025 Issue No: DSE-000 Rev 1

.

Forward Voltage Bins

Bin code	Min Forward Voltage [V]	Max Forward Voltage [V]
1012	1.00	1.25
1215	1.25	1.50
1517	1.50	1.75
1720	1.75	2.00
2022	2.00	2.25
2225	2.25	2.50
2527	2.50	2.75
2730	2.75	3.00
3032	3.00	3.25
3235	3.25	3.50
3537	3.50	3.75
3740	3.75	4.00
4042	4.00	4.25
4245	4.25	4.50
4547	4.50	4.75
4750	4.75	5.00
5052	5.00	5.25
5255	5.25	5.50
5557	5.50	5.75
5760	5.75	6.00
6062	6.00	6.25
6265	6.25	6.50
6567	6.50	6.75
6770	6.75	7.00

Notes:

1. Forward voltage measurement tolerance: ±0.05V.
2. Forward voltage bins are defined at I_F = 20mA operation.

Copyright ©2021, Everlight All Rights Reserved. Release Date:15.July.2025 Issue No: DSE-000 Rev 1

5. Part Number

67-63L-RGB0200H-AM

Part number is designated with below details.

67-63L = Product family name.

RGB = Color [1]

020 = Test current [mA]

0 = internal code

H = Brightness Level

AM = Automotive application

Note

[1] Color：

Symbol	Description
C	Cool White
N	Neutral White
W	Warm White
PA	Phosphor Converted Amber
PR	Phosphor Converted Red
UB	Blue
IB	Ice Blue
SB	Sky Blue
UP	Purple
UG	Green
UY	Yellow
UYG	Brilliant Yellow Green
UPG	Pale Green
UA	Amber
UR	Red
SR	Super Red
RGB	RGB-Color
PYG	Phosphor Converted Yellow Green

Copyright ©2021, Everlight All Rights Reserved. Release Date:15.July.2025 Issue No: DSE-000 Rev 1

6. Ordering Information

67-63L-RGB0200H-AM

Part Number of the 67-63	Order Code
67-63L-RGB0200H-AM(XXX)	67-63L-RGB0200H-A04-2T-AM(XXX)

Order code contains information with below details：

ABC = Please refer to the chart to the right [1]

DE = internal code

AM = Automotive Application

Note

[1] Group Bin chart

Group Bin	Dominant Wavelength (nm)		IV	VF
A04	Red	618-630	U2V2	1727
	Green	520-535	ABBB	2535
	Blue	450-458	S2T2	2535

Copyright ©2021, Everlight All Rights Reserved. Release Date:15.July.2025 Issue No: DSE-000 Rev 1

7. Mechanical Dimension

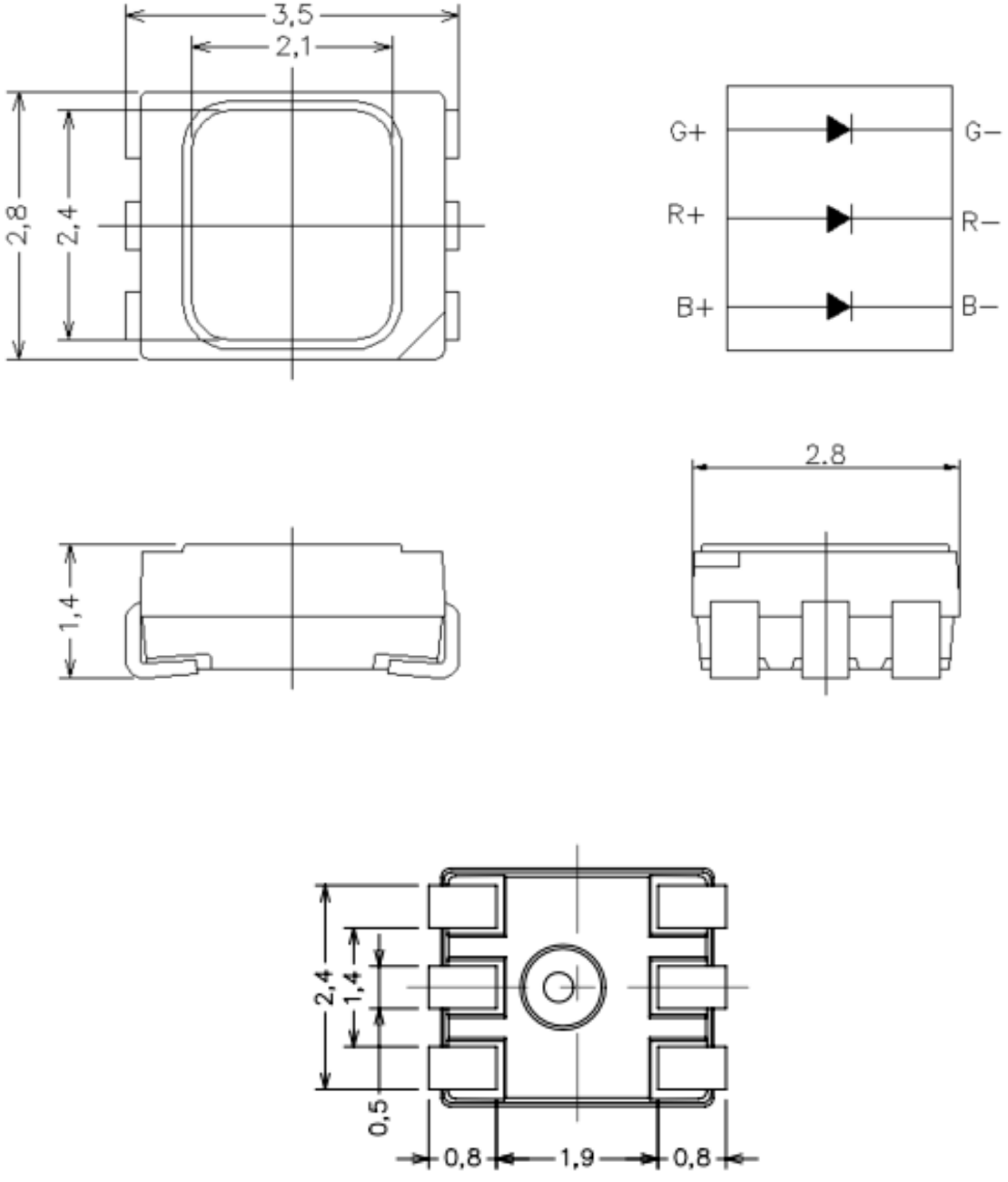

Notes:

1. Dimensions are in millimeters.
2. Tolerances unless mentioned are ± 0.1mm.

Copyright ©2021, Everlight All Rights Reserved. Release Date:15.July.2025 Issue No: DSE-000 Rev 1

8. Recommended Soldering Pad

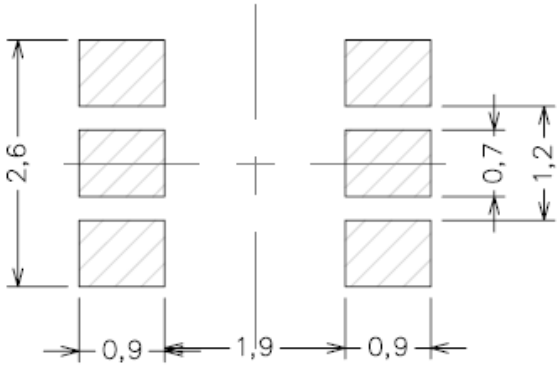

9. Reflow Soldering Profile

Soldering Condition (Reference: IPC/JEDEC J-STD-020D)

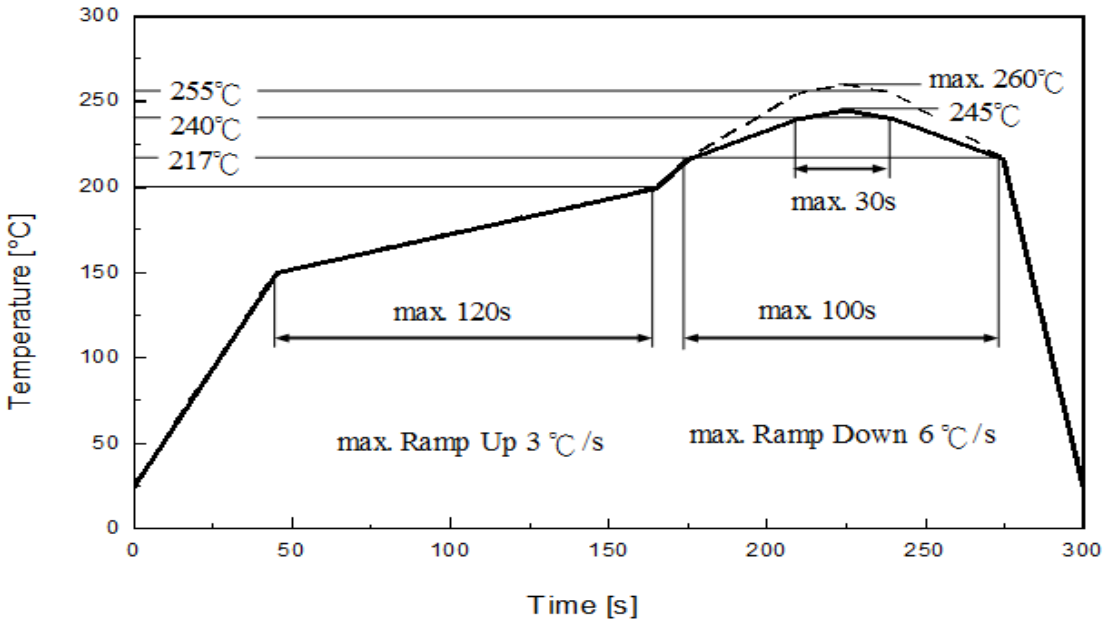

Profile Feature	Pb-Free Assembly Recommendation	Unit
Ramp-up rate to preheat 25 °C to 150 °C	3	°C /sec
Time of soaking zone 150 °C to 200 °C	120	sec
Ramp-up rate to peak	3	°C /sec
Liquidus temperature	217	°C
Time above liquidus temperature	100	sec
Peak temperature (max.)	260	°C
Time within 5°C of the specified peak temperature	30	sec
Ramp-down Rate (max.)	6	°C /sec

Copyright ©2021, Everlight All Rights Reserved. Release Date:15.July.2025 Issue No: DSE-000 Rev 1

10. Packaging Information

• Product Labeling



- CPN：Customer's Product Number
- P/N ：Everlight Part Number
- QTY：Packing Quantity
- CAT：Luminous Flux (Brightness) Bin
- HUE：Color Bin
- REF：Forward Voltage Bin
- LOT No：Lot Number

• Packing: Loaded Quantity 2000 pcs Per Reel

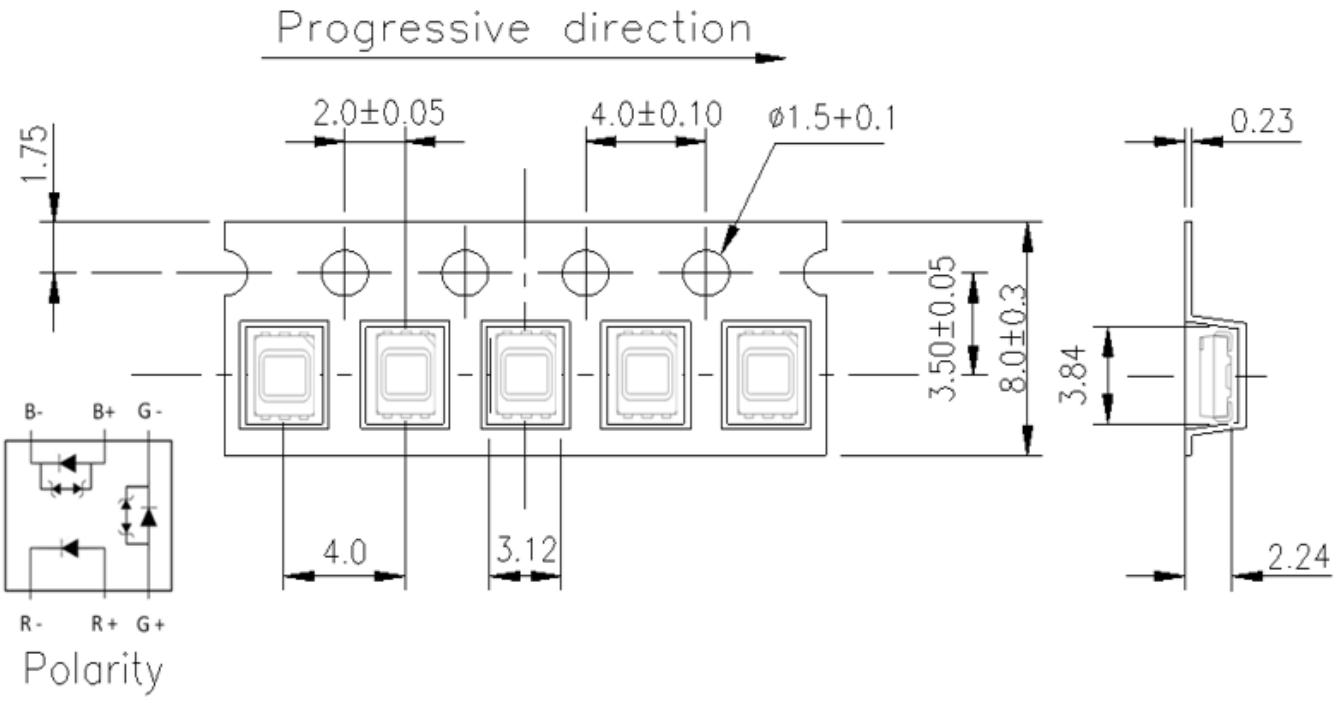

Notes:

1. Dimensions are in millimeters.

Copyright ©2021, Everlight All Rights Reserved. Release Date:15.July.2025 Issue No: DSE-000 Rev 1

● Reel Dimensions

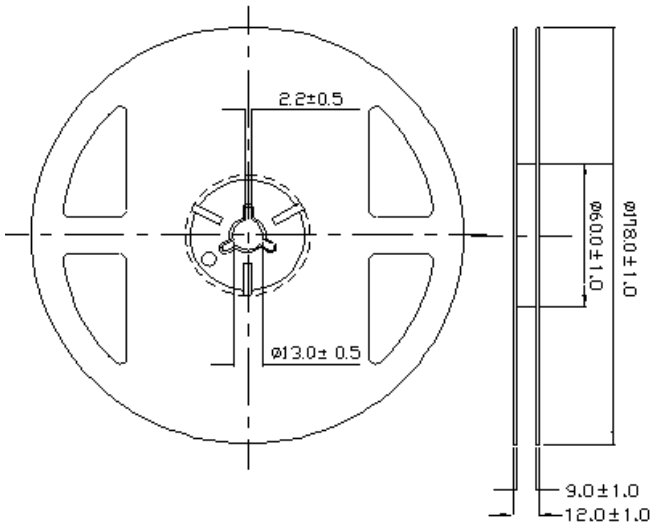

Notes:

1. Dimensions are in millimeters.

● Moisture Resistant Packing Process

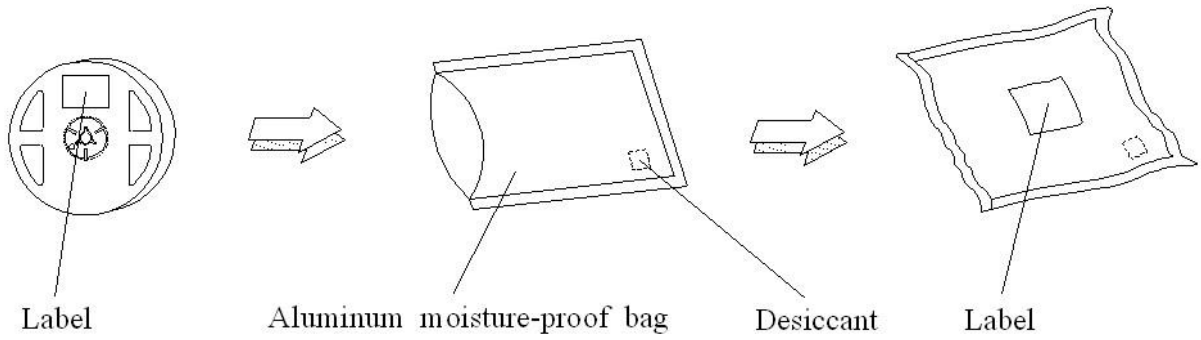

Copyright ©2021, Everlight All Rights Reserved. Release Date:15.July.2025 Issue No: DSE-000 Rev 1

11. Precaution for Use

1. Over-current-proof
   Customer must apply resistors for protection; otherwise slight voltage shift will cause big current change (burn out will happen).

2. Assemblies
   Do not stack assemblies containing LEDs to prevent damage to the optical surface of LEDs. Forces applied to the optical surface may result in the surface being damaged.

3. Soldering Condition
   3.1 When soldering, do not put stress on the LEDs during heating.
   3.2 After soldering, do not warp the circuit board.

4. Soldering Iron
   Each terminal is to go to the tip of soldering iron temperature less than 350℃ for 3 seconds within once in less than the soldering iron capacity 25W. Leave two seconds and more intervals, and do soldering of each terminal. Be careful because the damage of the product is often started at the time of the hand solder.

5. Repairing
   Repair should not be done after the LEDs have been soldered. When repairing is unavoidable, a double-head soldering iron should be used (as below figure). It should be confirmed beforehand whether the characteristics of the LEDs will or will not be damaged by repairing.

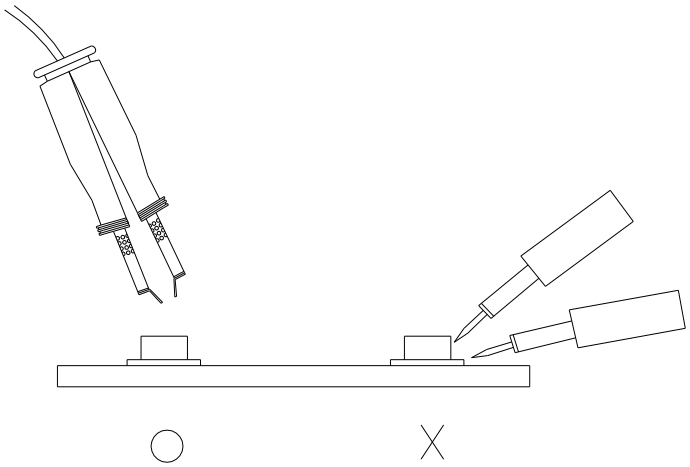

6. Reverse Operation: This product is intended to be operated applying a forward current within the specified range. Applying any continuous reverse bias or forward bias below the voltage range of light emission shall be avoided because it may cause migration which can change the electro-optical characteristics or damage the LED.

Copyright ©2021, Everlight All Rights Reserved. Release Date:15.July.2025 Issue No: DSE-000 Rev 1

12. Sulfur Test Criteria

Products	Failure Criteria
Exterior Lighting products	Luminous Flux +/-20%, forward voltage +/-10%, color coordinates x,y +/-0.01, color wavelength +/- 2 nm Visual defect issue following Everlight's inspection criteria
Interior lighting products	Luminous Flux +/-30% or +/-50% for some application, forward voltage +/-10%, color coordinates x,y +/-0.02, color wavelength +/- 2 nm Visual defect issue following Everlight's inspection criteria

H2S test	Grade A0	Grade A1	Grade B0	Grade B1
Class A	Pass ΔIV, ΔColor, ΔVF criteria No Corrosion	Pass ΔIV, ΔColor, ΔVF criteria Corrosion without the impact on reliability and lifetime		
Class B			Pass ΔIV, ΔColor, ΔVF criteria No Corrosion	Pass ΔIV, ΔColor, ΔVF criteria Corrosion without the impact on reliability and lifetime

Condition for H2S and FMG	Description	
	H2S	FMG
Class A	15 ppm with duration 336 h at 40 °C and 90% RH	Duration 500 h at 25 °C and 75% RH. H2S concentration: 10ppb SO2 concentration: 200ppb NO2 concentration: 200ppb Cl2 concentration: 10ppb
Class B	10 ppm with duration 500 h at 25 °C and 75% RH	

Grade for H2S Test	Description
0	No Corrosion
1	Corrosion without the impact on reliability and lifetime

Copyright ©2021, Everlight All Rights Reserved. Release Date:15.July.2025 Issue No: DSE-000 Rev 1