DATASHEET

EVERLIGHT AUTOMOTIVE

EL ALFS series

ALFS2BD-C010001L1-AM



Features

- Package：SMD ceramic package
- Typ. Color Temperature：5850K
- Typ. Luminous Flux：640 lm @ 1000mA
- Viewing angle：120º
- ESD：up to 8KV
- MSL：2
- Qualifications：According to AEC-Q102
- The product itself will remain within RoHS compliant version.
- Compliance with EU REACH
- Compliance Halogen Free. (Br<900ppm,Cl<900ppm,Br+Cl<1500ppm)
- Sulfur robustness

Applications

- Automotive Exterior Lighting
- Headlamp
- Daytime running light (DRL)
- Fog lamp

Contents

1. Characteristics 3
2. Absolute Maximum Ratings 4
3. Characteristics Graph 5
4. Binning Information 10
5. Part Number 14
6. Ordering Information 15
7. Mechanical Dimension 16
8. Recommended Soldering Pad 17
9. Reflow Soldering Profile 18
10. Packaging Information 19
11. Precaution for Use 21

EVERLIGHT

Copyright © 2016, Everlight All Rights Reserved. Release Date: 2019.4.12 Issue No: DHE-0003362 Ver.5
Ver.:5 Release Date:05/24/2019 狀態:Developing(開發階段)

1. Characteristics

Parameter	Symbol	Min.	Typ.	Max.	Unit	Condition
Forward current[1]	I_F	50	1000	1500	mA	
Luminous Flux[2][3]	Φ_v	550	640	750	lm	I_F=1000mA
Forward Voltage[4] [5]	V_F	5.8	6.7	7.6	V	I_F=1000mA
Viewing Angle	ϕ	---	120	---	deg	I_F=1000mA
Color	K	5180	---	6680	K	I_F=1000mA
Thermal Resistance (Junction to Solder)	$R_{th\ JS\ real}$	---	3.1	3.5	K/W	I_F=1000mA
	$R_{th\ JS\ el}$	---	2.1	2.5		

Notes:

1. Forward conditon by each of LED.
2. Luminous flux measurement tolerance: ±8%.
3. The data of luminous flux measured at thermal pad=25°C
4. Forward voltage measurement tolerance: ±0.05V
5. The Vf range shown in the table above indicates 99% output.

Copyright © 2016, Everlight All Rights Reserved. Release Date: 2019.4.12 Issue No: DHE-0003362 Ver.5

Ver.:5 Release Date:05/24/2019 狀態:Developing(開發階段)

2. Absolute Maximum Ratings

Parameter	Symbol	Ratings	Unit
Reverse Voltage	V_R	Not designed for reverse operation	V
Power Dissipation	P_d	11400	mW
Forward Current	I_F	1500	mA
Junction Temperature	T_J	150	°C
Operating Temperature	T_{opr}	-40 ~ +125	°C
Storage Temperature	T_{stg}	-40 ~ +125	°C
ESD Sensitivity (R=1.5kΩ, C= 100pF)	ESD_{HBM}	8	KV
Soldering Temperature	Reflow	260	°C

EVERLIGHT

Copyright © 2016, Everlight All Rights Reserved. Release Date: 2019.4.12 Issue No: DHE-0003362 Ver.5

Ver.:5 Release Date:05/24/2019 狀態:Developing(開發階段)

3. Characteristics Graph

Wavelength Characteristics Relative Spectral Distribution @ T_S = 25°C、I_F = 1000mA

$$\Phi_V/\Phi_V\,(Max.) = f(\lambda)$$

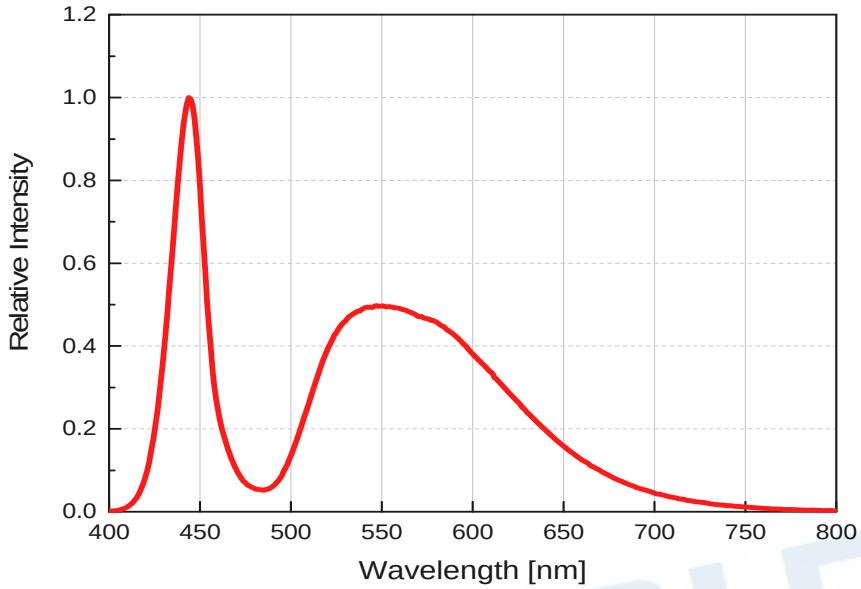

Typical Diagram Characteristics of Radiation

$$\Phi_V/\Phi_V\,(0^\circ) = f(\varphi)$$

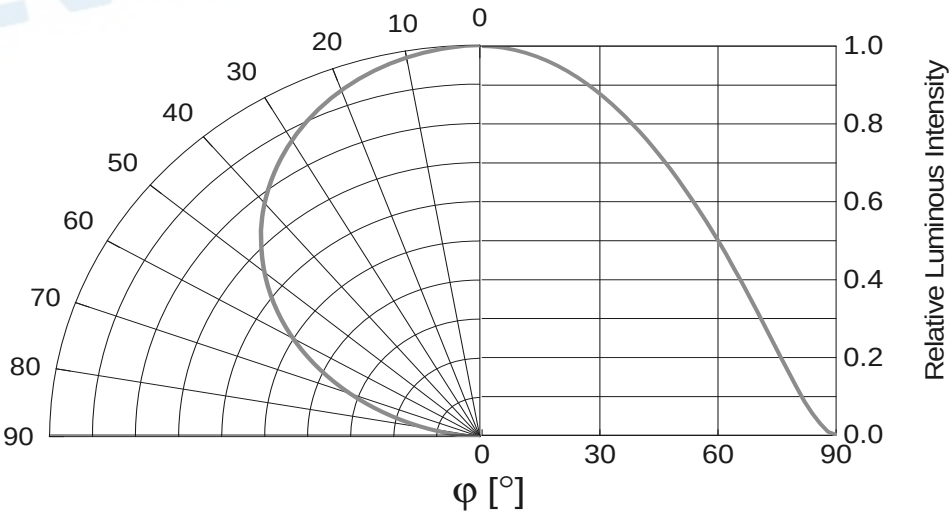

Notes:

1. φ is the off axis angle from lamp centerline where the luminous intensity is 1/2 of the peak value.
2. View angle tolerance is ± 5°

Copyright © 2016, Everlight All Rights Reserved. Release Date: 2019.4.12 Issue No: DHE-0003362 Ver.5
Ver.:5 Release Date:05/24/2019 狀態:Developing(開發階段)

Forward Current vs. Forward Voltage
@ T_S = 25°C

$$I_F = f(V_F)$$

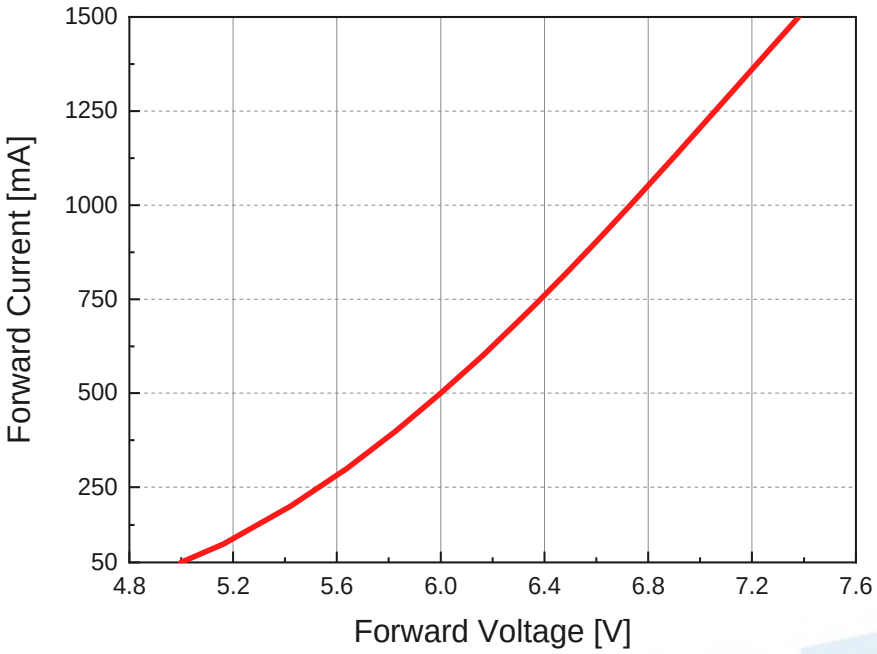

Relative Luminous Flux vs. Forward Current
@ T_S = 25°C

$$\Phi_V / \Phi_V\,(1000mA) = f(I_F)$$

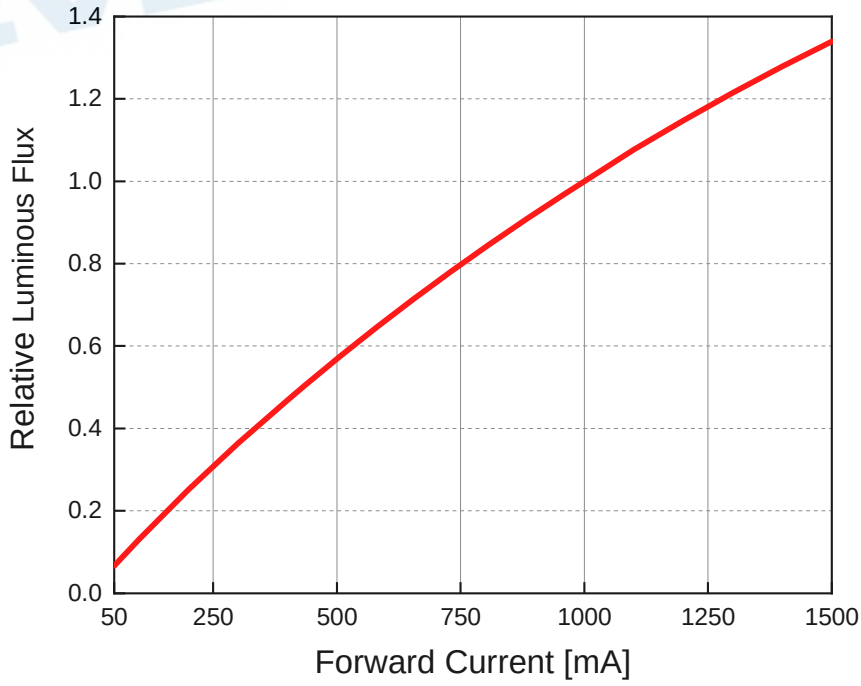

Copyright © 2016, Everlight All Rights Reserved. Release Date: 2019.4.12 Issue No: DHE-0003362 Ver.5
www.everlight.com
Ver.:5 Release Date:05/24/2019 狀態:Developing(開發階段)

Chromaticity Coordinates vs. Forward Current @ T_S = 25°C

$$\Delta CIE\ x, \Delta CIE\ y = f(I_F)$$

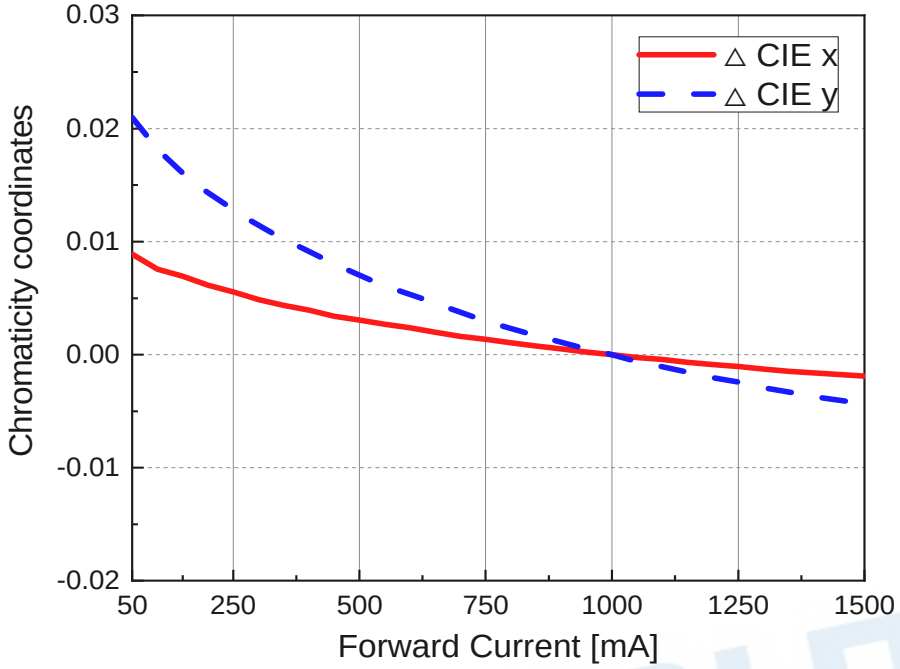

Relative Forward Voltage vs. Junction Temperature @ I_F = 1000mA

$$\Delta V_F = V_F - V_F(25^\circ C) = f(T_j)$$

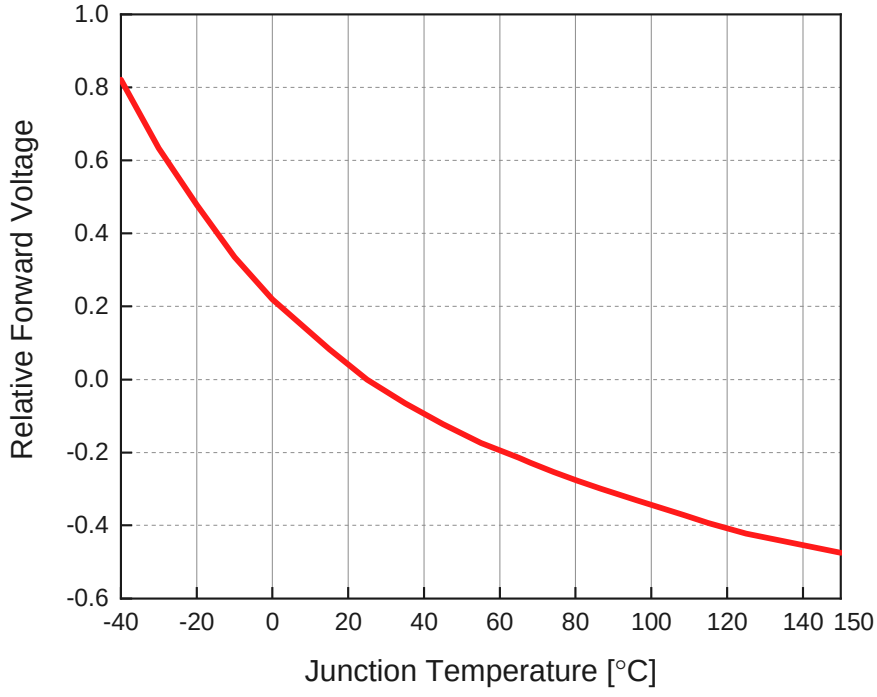

Copyright © 2016, Everlight All Rights Reserved. Release Date: 2019.4.12 Issue No: DHE-0003362 Ver.5
www.everlight.com
Ver.:5 Release Date:05/24/2019 狀態:Developing(開發階段)

Relative Luminous Flux vs. Junction Temperature @ I_F = 1000mA

$$\Phi_V / \Phi_V(25^\circ C) = f(T_j)$$

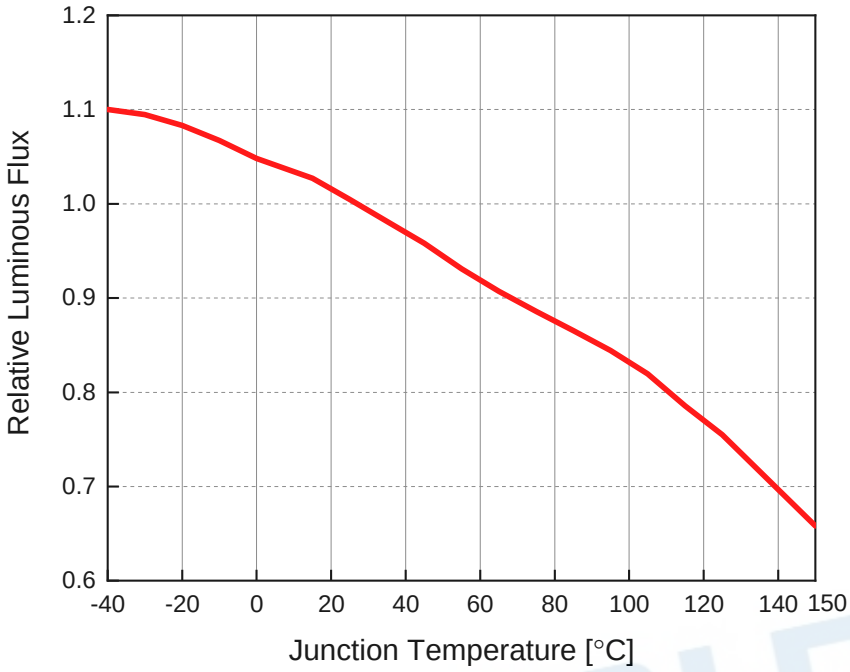

Chromaticity Coordinates Shift vs. Junction Temperature @ I_F = 1000mA

$$\Delta CIE\ x, \Delta CIE\ y = f(T_j)$$

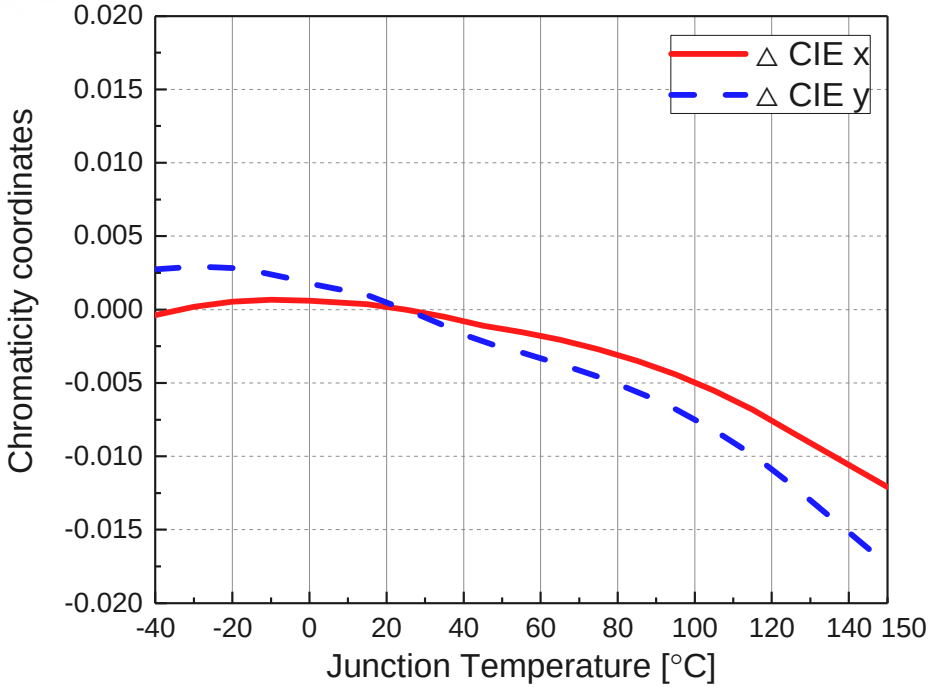

Copyright © 2016, Everlight All Rights Reserved. Release Date: 2019.4.12 Issue No: DHE-0003362 Ver.5
Ver.:5 Release Date:05/24/2019 狀態:Developing(開發階段)

Forward Current Derating Curve

$$I_F = f(T_S)$$

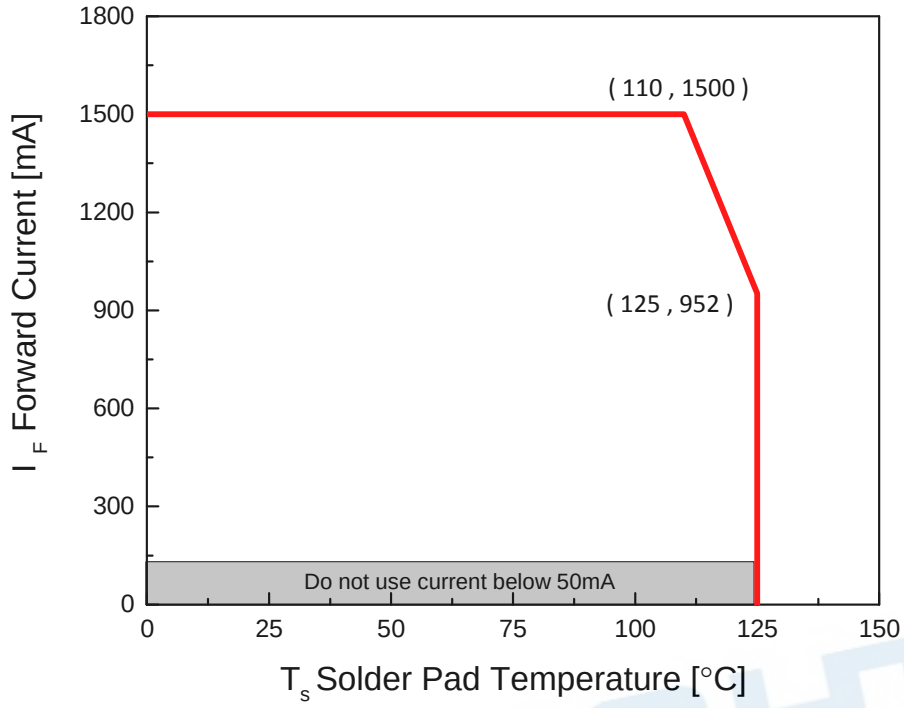

Copyright © 2016, Everlight All Rights Reserved. Release Date: 2019.4.12 Issue No: DHE-0003362 Ver.5
Ver.:5 Release Date:05/24/2019 狀態:Developing(開發階段)

4. Binning Information

Luminous Intensity Bins

[Cool White]			
Group	Bin	Minimum Photometric Flux (lm)	Maximum Photometric Flux (lm)
D	4	550	600
	5	600	650
	6	650	700
	7	700	750

Notes:

1. Luminous flux measurement tolerance: ±8%.
2. Highlighted Black Box is available bins.

Copyright © 2016, Everlight All Rights Reserved. Release Date: 2019.4.12 Issue No: DHE-0003362 Ver.5

Ver.:5 Release Date:05/24/2019 狀態:Developing(開發階段)

Forward Voltage Bins

Group	Minimum Forward Voltage(V)	Maximum Forward Voltage(V)
2A	5.80	6.40
2B	6.40	7.00
2C	7.00	7.60

Notes:

1. Forward Voltage measurement tolerance: ±0.05V.

Copyright © 2016, Everlight All Rights Reserved. Release Date: 2019.4.12 Issue No: DHE-0003362 Ver.5

Ver.:5 Release Date:05/24/2019 狀態:Developing(開發階段)

Color Bin Structure
ECE Bin Structure

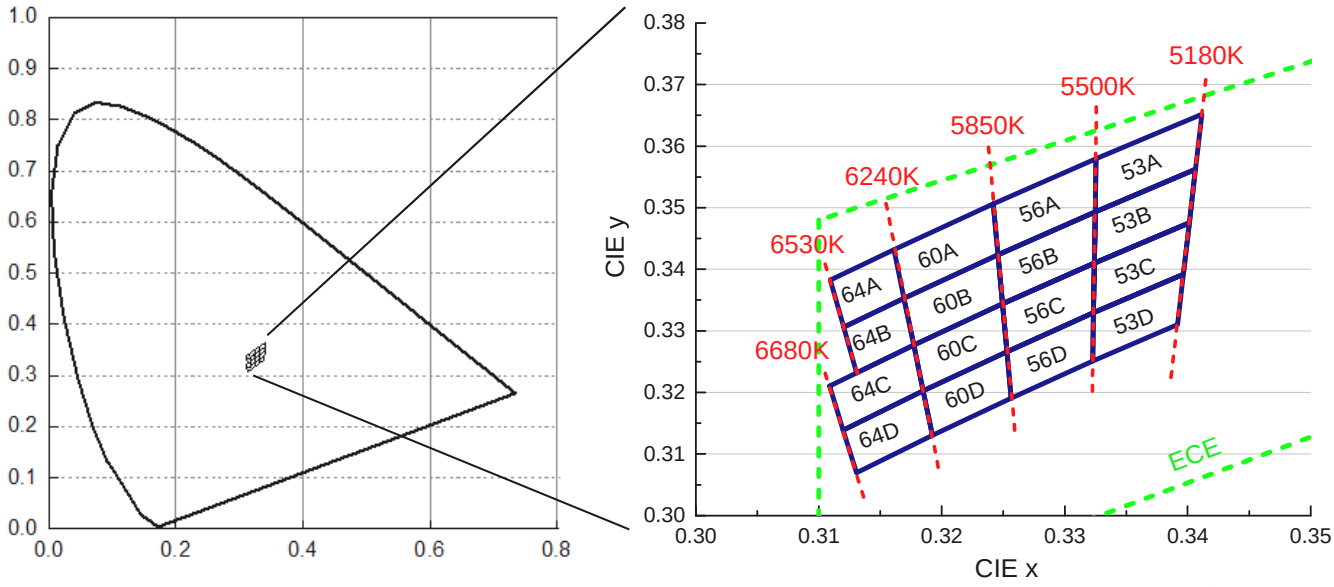

Cool White Bin Coordinates

Bin	CIE x	CIE y
64A	0.3109	0.3382
	0.3161	0.3432
	0.3169	0.3353
	0.3120	0.3306
Reference Range: 6240~6530K		

Bin	CIE x	CIE y
64B	0.3120	0.3306
	0.3169	0.3353
	0.3177	0.3277
	0.3131	0.3232
Reference Range: 6240~6530K		

Bin	CIE x	CIE y
64C	0.3109	0.3211
	0.3177	0.3277
	0.3185	0.3203
	0.3120	0.3139
Reference Range: 6240~6680K		

Bin	CIE x	CIE y
64D	0.3120	0.3139
	0.3185	0.3203
	0.3192	0.3131
	0.3131	0.3070
Reference Range: 6240~6680K		

Bin	CIE x	CIE y
60A	0.3161	0.3432
	0.3242	0.3506
	0.3246	0.3424
	0.3169	0.3353
Reference Range: 5850~6240K		

Bin	CIE x	CIE y
60B	0.3169	0.3353
	0.3246	0.3424
	0.3249	0.3344
	0.3177	0.3277
Reference Range: 5850~6240K		

Copyright © 2016, Everlight All Rights Reserved. Release Date: 2019.4.12 Issue No: DHE-0003362 Ver.5
www.everlight.com
Ver.:5 Release Date:05/24/2019 狀態:Developing(開發階段)

Bin	CIE x	CIE y
60C	0.3177	0.3277
	0.3249	0.3344
	0.3253	0.3266
	0.3185	0.3203
Reference Range: 5850~6240K		

Bin	CIE x	CIE y
60D	0.3185	0.3203
	0.3253	0.3266
	0.3256	0.3191
	0.3192	0.3131
Reference Range: 5850~6240K		

Bin	CIE x	CIE y
56A	0.3242	0.3506
	0.3325	0.3579
	0.3325	0.3493
	0.3246	0.3424
Reference Range: 5500~5850K		

Bin	CIE x	CIE y
56B	0.3246	0.3424
	0.3325	0.3493
	0.3324	0.3410
	0.3249	0.3344
Reference Range: 5500~5850K		

Bin	CIE x	CIE y
56C	0.3249	0.3344
	0.3324	0.3410
	0.3323	0.3329
	0.3253	0.3266
Reference Range: 5500~5850K		

Bin	CIE x	CIE y
56D	0.3253	0.3266
	0.3323	0.3329
	0.3323	0.3251
	0.3256	0.3191
Reference Range: 5500~5850K		

Bin	CIE x	CIE y
53A	0.3325	0.3579
	0.3412	0.3652
	0.3406	0.3562
	0.3325	0.3493
Reference Range: 5180~5500K		

Bin	CIE x	CIE y
53B	0.3325	0.3493
	0.3406	0.3562
	0.3401	0.3476
	0.3324	0.3410
Reference Range: 5180~5500K		

Bin	CIE x	CIE y
53C	0.3324	0.3410
	0.3401	0.3476
	0.3396	0.3392
	0.3323	0.3329
Reference Range: 5180~5500K		

Bin	CIE x	CIE y
53D	0.3323	0.3329
	0.3396	0.3392
	0.3392	0.3310
	0.3323	0.3251
Reference Range: 5180~5500K		

Notes:

1. Color coordinates measurement tolerance: ±0.005.

Copyright © 2016, Everlight All Rights Reserved. Release Date: 2019.4.12 Issue No: DHE-0003362 Ver.5
Ver.:5 Release Date:05/24/2019 狀態:Developing(開發階段)

5. Part Number

ALFS2BD-C010001L1-AM

Part number is designated with below details.

ALFS = product family name.

2 = chip number

B = Product type

D = Device

C = Color [1]

0 = CRI (0=N/A ; >70%=7 ; >80%=8 ; >90%=9)

1000 = test current [mA]

1 = internal code

L1 = Brightness Level

AM = automotive application

Note：

[1] Color：

Symbol	Description
C	Cool White
N	Neutral White
W	Warm White
PA	Phosphor Converted Amber
PR	Phosphor Converted Red
UB	Blue
IB	Ice Blue
SB	Sky Blue
UP	Purple
UG	Green
UY	Yellow
UYG	Brilliant Yellow Green
UPG	Pale Green
UA	Amber
UR	Red
SR	Super Red
RGB	RGB-Color

Copyright © 2016, Everlight All Rights Reserved. Release Date: 2019.4.12 Issue No: DHE-0003362 Ver.5

Ver.:5 Release Date:05/24/2019 狀態:Developing(開發階段)

6. Ordering Information

ALFS2BD-C010001L1-ABC-DE-AM

Part Number of the ALFS	Order Code
ALFS2BD-C010001L1-AM	ALFS2BD-C010001L1-ABC-DE-AM

Order code contains information with below details：

A = min/max wavelength or CCT

B = min./max. luminous flux in [lm] or luminous intensity in [mcd]

C = min./max. Forward Voltage

DE = Packing quantity (Minimum package)

Copyright © 2016, Everlight All Rights Reserved. Release Date: 2019.4.12 Issue No: DHE-0003362 Ver.5

Ver.:5 Release Date:05/24/2019 狀態:Developing(開發階段)

7. Mechanical Dimension

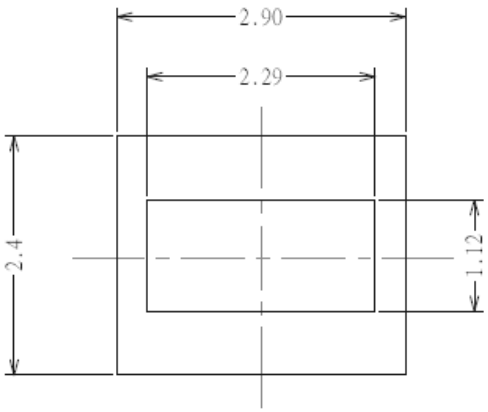

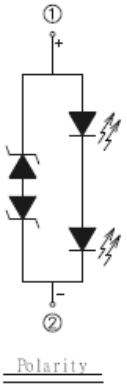

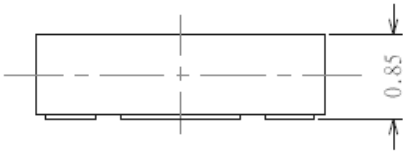

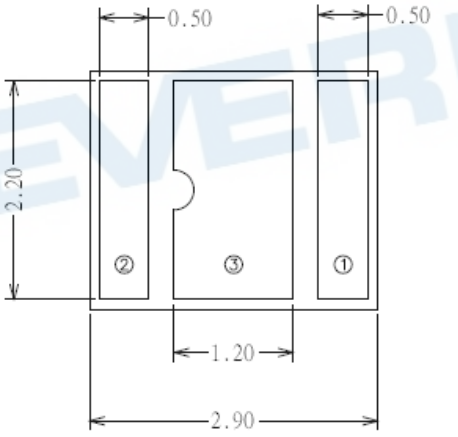

①	Anode
②	Cathode
③	Thermal pad

Notes:

1. Dimensions are in millimeters.
2. Tolerances unless mentioned are ± 0.1mm.

Copyright © 2016, Everlight All Rights Reserved. Release Date: 2019.4.12 Issue No: DHE-0003362 Ver.5
Ver.:5 Release Date:05/24/2019 狀態:Developing(開發階段)

8. Recommended Soldering Pad

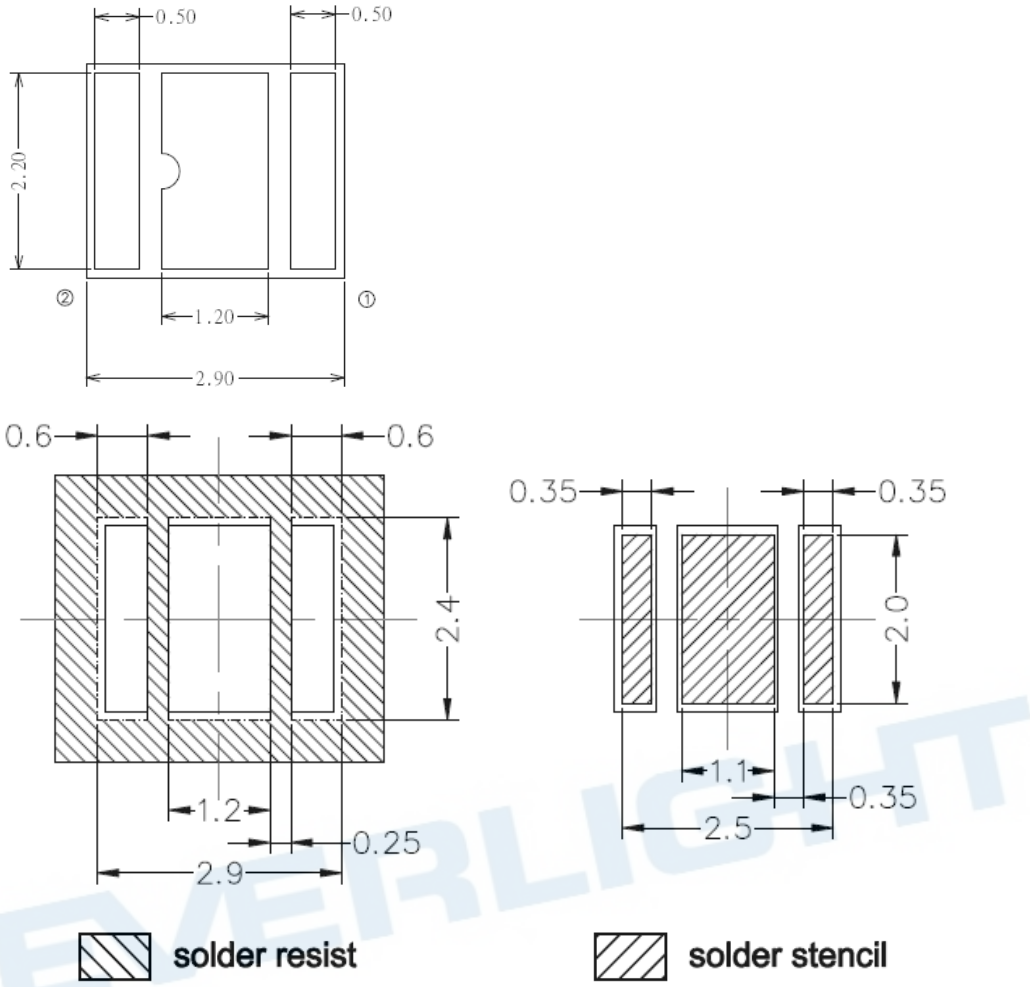

(Unit:mm)

We recommend Cu area like below drawing. You can use this recommendation when you draw your module design.
(MCPCB information; Cu thickness 35um, dielectric layer 100um, 2W/mK, Al thickness 1.5mm)

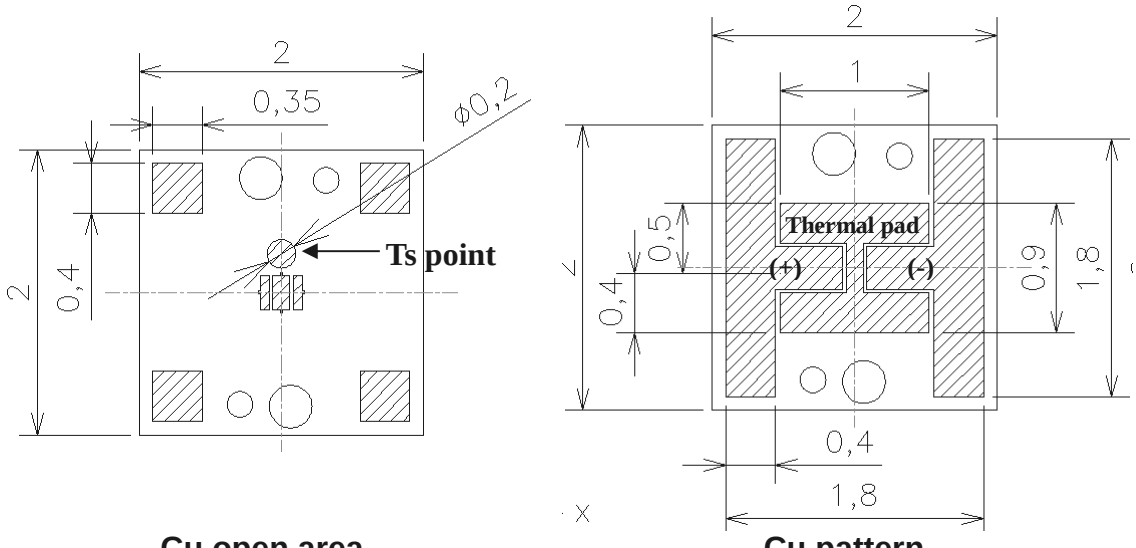

Cu open area **Cu pattern**

(Unit:cm)

Copyright © 2016, Everlight All Rights Reserved. Release Date: 2019.4.12 Issue No: DHE-0003362 Ver.5

Ver.:5 Release Date:05/24/2019 狀態:Developing(開發階段)

9. Reflow Soldering Profile

Soldering Condition (Reference: IPC/JEDEC J-STD-020D)

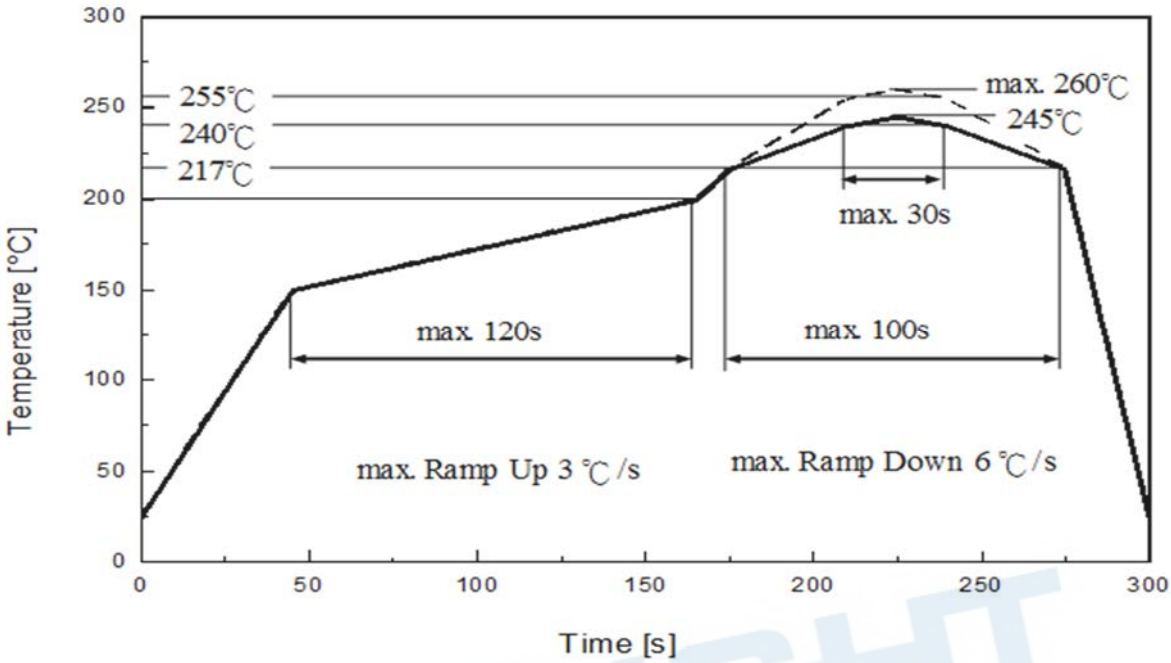

Profile Feature	Pb-Free Assembly	Unit Einheit
Ramp-up rate to preheat 25 °C to 150 °C	3	°C /sec
Time of soaking zone 150 °C to 200 °C	120	sec
Ramp-up rate to peak	3	°C /sec
Liquidus temperature	217	°C
Time above liquidus temperature	100	sec
Peak temperature (max.)	260	°C
Time within 5°C of the specified peak temperature	30	sec
Ramp-down Rate (max.)	6	°C /sec

Copyright © 2016, Everlight All Rights Reserved. Release Date: 2019.4.12 Issue No: DHE-0003362 Ver.5
Ver.:5 Release Date:05/24/2019 狀態:Developing(開發階段)

10. Packaging Information

• Product Labeling

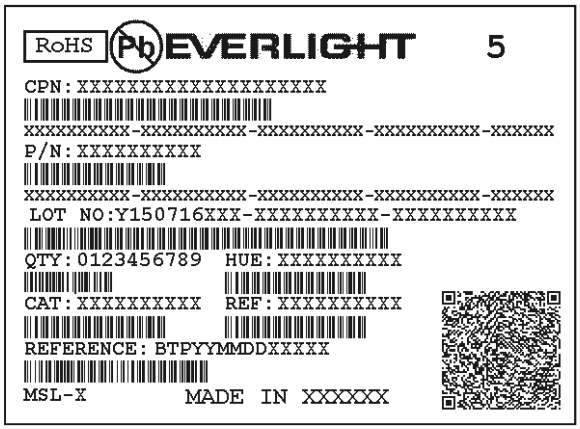

- CPN：Customer's Product Number
- P/N：Everlight Part Number
- LOT NO：Lot Number
- QTY：Packing Quantity
- HUE：Color Bin
- CAT：Luminous Flux (Brightness) Bin
- REF：Forward Voltage Bin

• Carrier Tape Dimensions as the following

Reel: 1000pcs, MOQ≥ 100pcs (has to be a multiple of 100pcs)

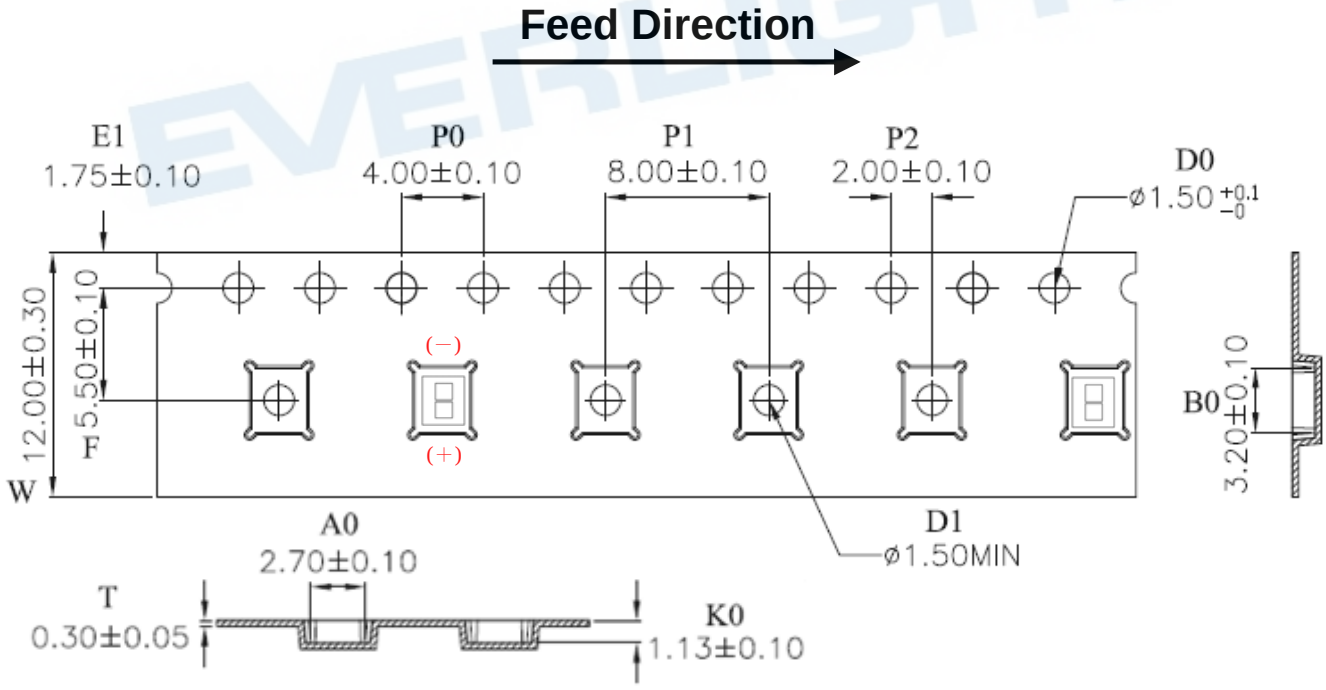

Notes:

1. Dimensions are in millimeters.

Copyright © 2016, Everlight All Rights Reserved. Release Date: 2019.4.12 Issue No: DHE-0003362 Ver.5
Ver.:5 Release Date:05/24/2019 狀態:Developing(開發階段)

- **Reel Dimensions**

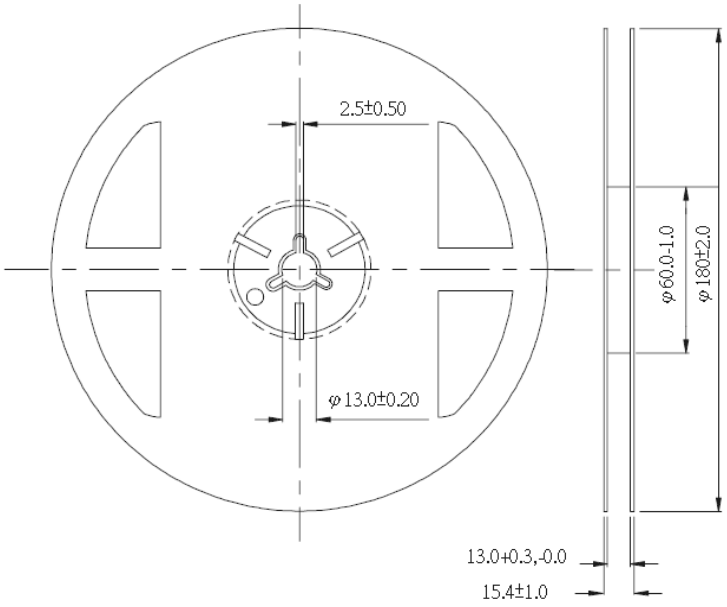

Notes:

Dimensions are in millimeters.

Moisture Resistant Packing Process

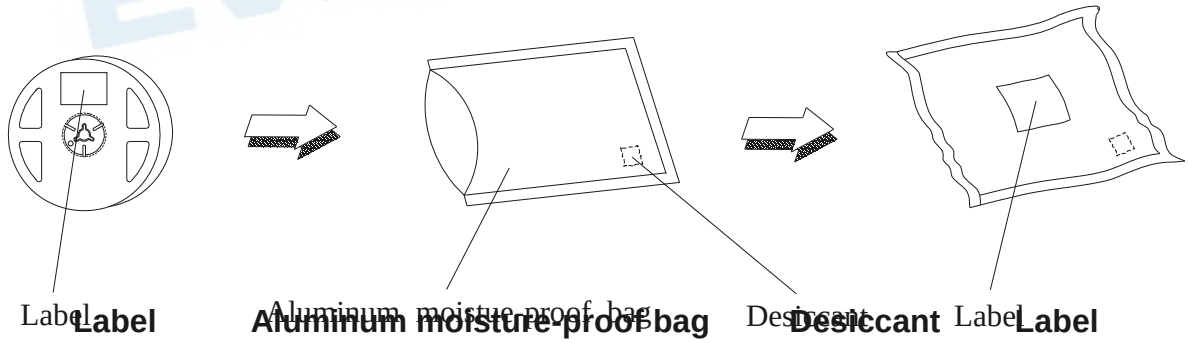

Copyright © 2016, Everlight All Rights Reserved. Release Date: 2019.4.12 Issue No: DHE-0003362 Ver.5

Ver.:5 Release Date:05/24/2019 狀態:Developing(開發階段)

11. Precaution for Use

1. Over-current-proof
   Customer must apply resistors for protection; otherwise slight voltage shift will cause big current change (burn out will happen).

2. Assemblies
   Do not stack assemblies containing LEDs to prevent damage to the optical surface of LEDs. Forces applied to the optical surface may result in the surface being damaged.

3. Soldering Condition
   3.1 When soldering, do not put stress on the LEDs during heating.
   3.2 After soldering, do not warp the circuit board.

4. Soldering Iron
   Each terminal is to go to the tip of soldering iron temperature less than 350℃ for 3 seconds within once in less than the soldering iron capacity 25W. Leave two seconds and more intervals, and do soldering of each terminal. Be careful because the damage of the product is often started at the time of the hand solder.

5. Repairing
   Repair should not be done after the LEDs have been soldered. When repairing is unavoidable, a double-head soldering iron should be used (as below figure). It should be confirmed beforehand whether the characteristics of the LEDs will or will not be damaged by repairing.

EVERLIGHT

Copyright © 2016, Everlight All Rights Reserved. Release Date: 2019.4.12 Issue No: DHE-0003362 Ver.5

Ver.:5 Release Date:05/24/2019 狀態:Developing(開發階段)

Revision History

Current version: 2019 / 4 / 12

Issue No: DHE-0003362

Version: 5

Created by : Hsiang Yeh

Rev.	Subjects (major change in previous version)	Modified date
1	Preliminary	2017/06/08
2	P1. Features → Remove Preconditioning; According to JEDEC J-STD 020D Level 1.	2017/08/21
3	P7、P8 Modify graph data use △CIEx、△CIEy，P9. Add (X,Y) P21. Modify Precaution for Use，P22. Remove	2018/03/07
4	P1. Feature add declaration → Compliance Halogen Free. P1. Features →Modify Typ. Luminous Flux、P3 Luminous Flux、 P10 4.Binning Information Modify	2018/04/25 2018/05/09
	P1. Features →Modify Min.Typ. Luminous Flux、P3 Luminous Flux、 P1. Modify→AEC-Q102 P10. Modify Binning Information P11. Modify Forward Voltage Bins P15. Modify Order code P16. Mechanical dimension and thermal pad is not electrical P17. Unit. P21. Remove picture	2018/08/22
5	Approved	2019/04/12

Copyright © 2016, Everlight All Rights Reserved. Release Date: 2019.4.12 Issue No: DHE-0003362 Ver.5

Ver.:5 Release Date:05/24/2019 狀態:Developing(開發階段)