DATASHEET

ELUC3535NUB
0.13 W Series



Introduction

The ELUC3535NUB product series is a ceramic based LED with high quality and reliability that suitable for UV application.

Features

- High power UVC LED
- Dimension 3.5mm* 3.5mm* 1.3mm
- ESD protection up to 2KV
- Typical viewing angle: 120°
- RoHS compliant
- Pb free
- Compliance with EU REACH
- Compliance Halogen Free (Br<900ppm,Cl<900ppm,Br+Cl<1500ppm)

Applications

- UV Sterilization

Copyright © 2020, Everlight All Rights Reserved. Release Date:07.10.2024 Issue No:DHE-0003624 Rev:8

Ver.:8 Release Date:07/26/2024 狀態:Approved(正式發行)

Product Nomenclature

ELUC3535NUB-P7085Q05075020-S21Q

EL = Everlight

UC = UVC

3535 = 3.5mm x 3.5mm Package

N = Package Material: AIN

U = Coating: Au

B = Angle: 120°

P = Peak Wavelength

7085= Wavelength Range: 270~285nm

Q0 = Minimum Radiant Flux Spec: 1mW

5075 = Forward Voltage Spec: 5.0~7.5V

020= Forward Current: 20mA

S = Chip Type: Submount

2 = Chip Size: 20 mil

1 = Chip QTY: 1 chip

Q = Process Type: Quartz Glass

Copyright © 2020, Everlight All Rights Reserved. Release Date:07.10.2024 Issue No:DHE-0003624 Rev:8

Ver.:8 Release Date:07/26/2024 狀態:Approved(正式發行)

Absolute Maximum Ratings

Parameter	Symbol	Ratings	Unit
Max. DC Forward Current (mA)	I_F	100	mA
Max. ESD Resistance	V_B	2000	V
Max. Junction Temperature	T_J	100	°C
Thermal Resistance	R_{th}	65	℃/W
Operating Temperature	T_{Opr}	-30 ~ +85	°C
Storage Temperature	T_{Stg}	-40 ~ +100	°C

PN of the ELUC3535NUB series: UVC LEDs

Order Code of ELUC3535NUB	Minimum Radiant Flux (mW)	Typical Radiant Flux (mW)	Maximum Radiant Flux (mW)	Peak Wavelength (nm)	Forward Voltage (V)	Forward Current (mA)
ELUC3535NUB-P7085Q05075020-S21Q	1	2	2.5	270-285	5.0-7.5	20

Copyright © 2020, Everlight All Rights Reserved. Release Date:07.10.2024 Issue No:DHE-0003624 Rev:8

Ver.:8 Release Date:07/26/2024 狀態:Approved(正式發行)

Product Binning

Radiant Flux Bins

Bin Code	Minimum Radiant Flux (mW)	Maximum Radiant Flux (mW)
Q0A	1	1.5
Q0B	1.5	2
Q0C	2	2.5

Notes:

1. Radiant flux measurement tolerance: ±10%.
2. Forward voltage bins are defined at I_F=20mA operation.

Peak Wavelength Bins

Bin Code	Minimum Peak Wavelength (nm)	Maximum Peak Wavelength (nm)
U27A	270	275
U27B	275	280
U28	280	285

Notes:

1. Peak Wavelength measurement tolerance: ±1nm.
2. Forward voltage bins are defined at I_F=20mA operation.

Forward Voltage Bins

Bin	Minimum Forward Voltage (V)	Maximum Forward Voltage (V)
5055	5.0	5.5
5560	5.5	6.0
6065	6.0	6.5
6570	6.5	7.0
7075	7.0	7.5

Notes:

1. Forward voltage measurement tolerance: ±2%.
2. Forward voltage bins are defined at I_F=20mA operation.

Copyright © 2020, Everlight All Rights Reserved. Release Date:07.10.2024 Issue No:DHE-0003624 Rev:8

Ver.:8 Release Date:07/26/2024 狀態:Approved(正式發行)

Mechanical Dimension

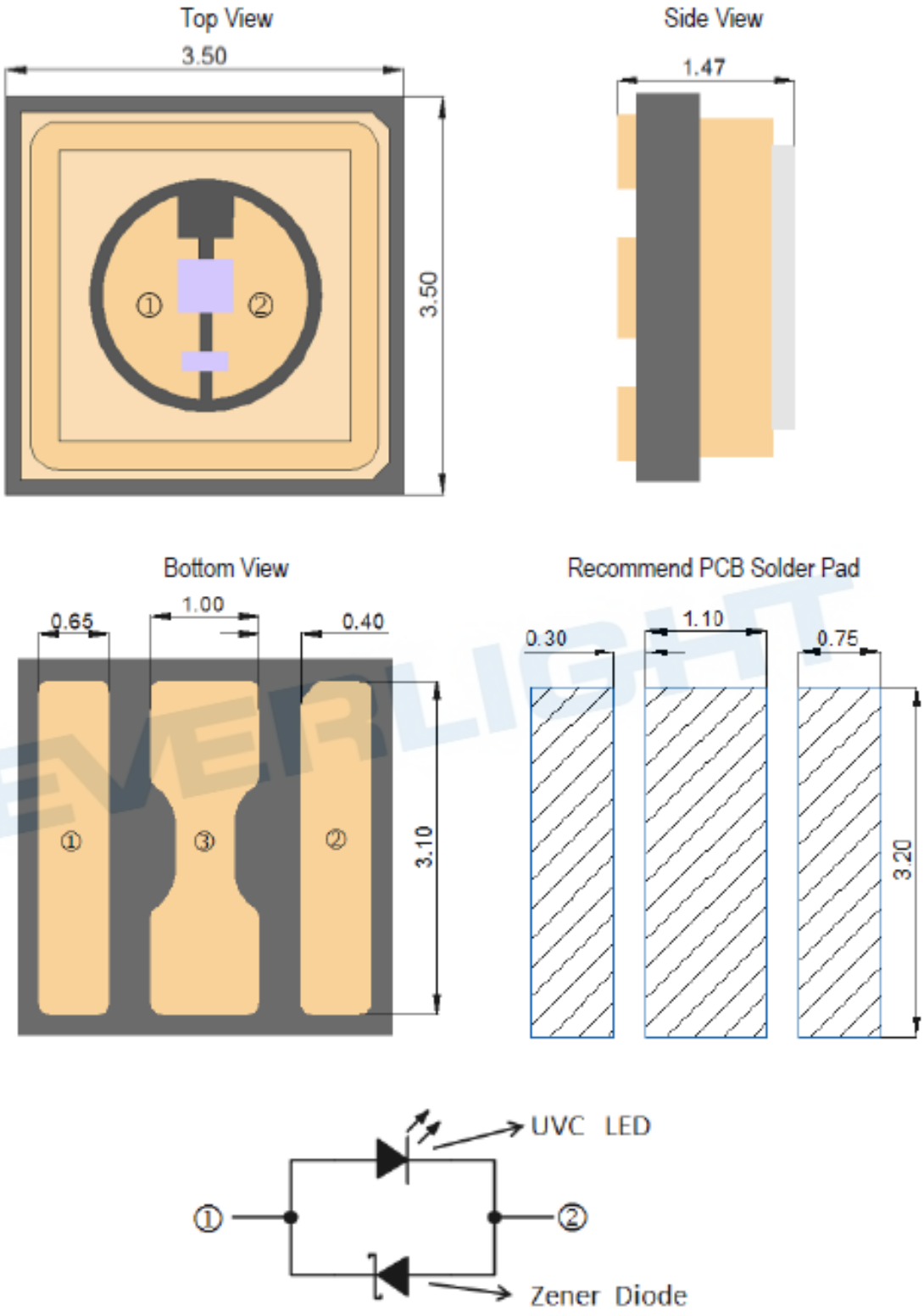

1. Dimensions are in millimeters.
2. Tolerances unless mentioned are ± 0.2mm
3. Pad Configuration 1:Cathode ,2:Anode ,3:Thermal Pad

Copyright © 2020, Everlight All Rights Reserved. Release Date:07.10.2024 Issue No:DHE-0003624 Rev:8

Ver.:8 Release Date:07/26/2024 狀態:Approved(正式發行)

Reflow Soldering Characteristics

For Reflow Process

a. ELUC series are suitable for SMT processes.

b. Curing of glue in oven must be according to standard operation flow processes.

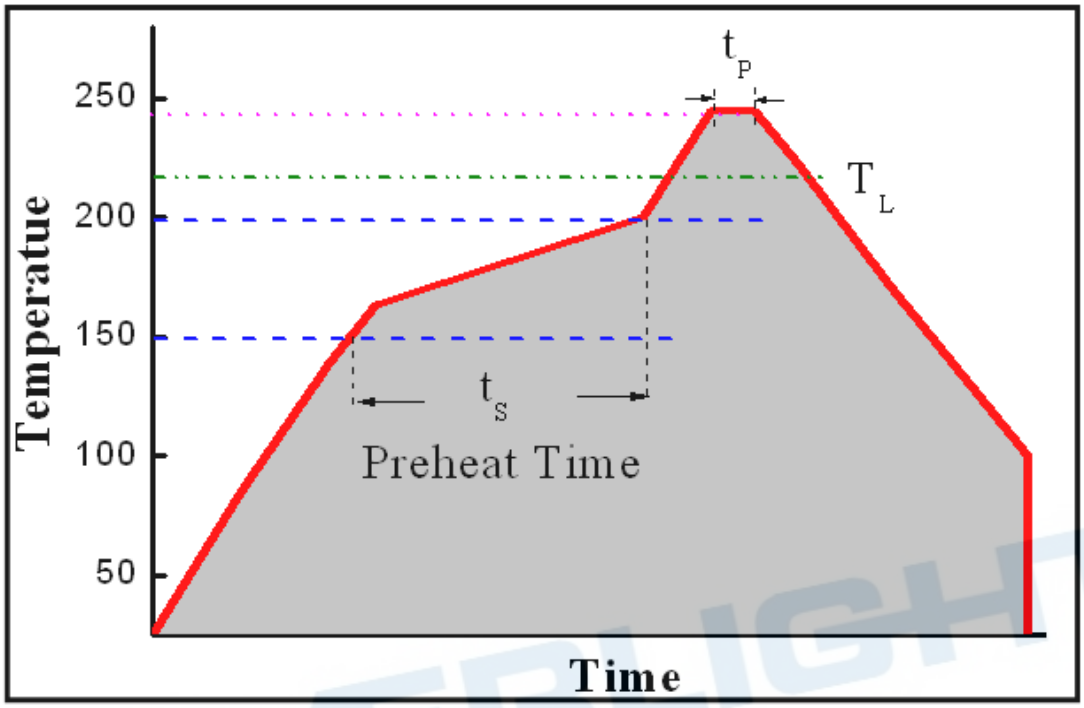

Profile Feature	Lead Free Assembly
Ramp-Up Rate	2-3 ℃/S
Preheat Temperature	150-200 ℃
Preheat Time (t_S)	60-120 S
Liquid Temperature (T_L)	217 ℃
Time maintained above T_L	60-90 S
Peak Temperature (T_P)	240±5 ℃
Peak Time (t_P)	Max 20 S
Ramp-Down Rate	3-5 ℃/S

c. Reflow soldering should not be done more than twice.

d. In soldering process, stress on the LEDs during heating should be avoided.

e. After soldering, do not bend the circuit board.

Copyright © 2020, Everlight All Rights Reserved. Release Date:07.10.2024 Issue No:DHE-0003624 Rev:8

Ver.:8 Release Date:07/26/2024 狀態:Approved(正式發行)

Typical Characteristics Curves

Spectrum @ Thermal Pad Temperature = 25℃

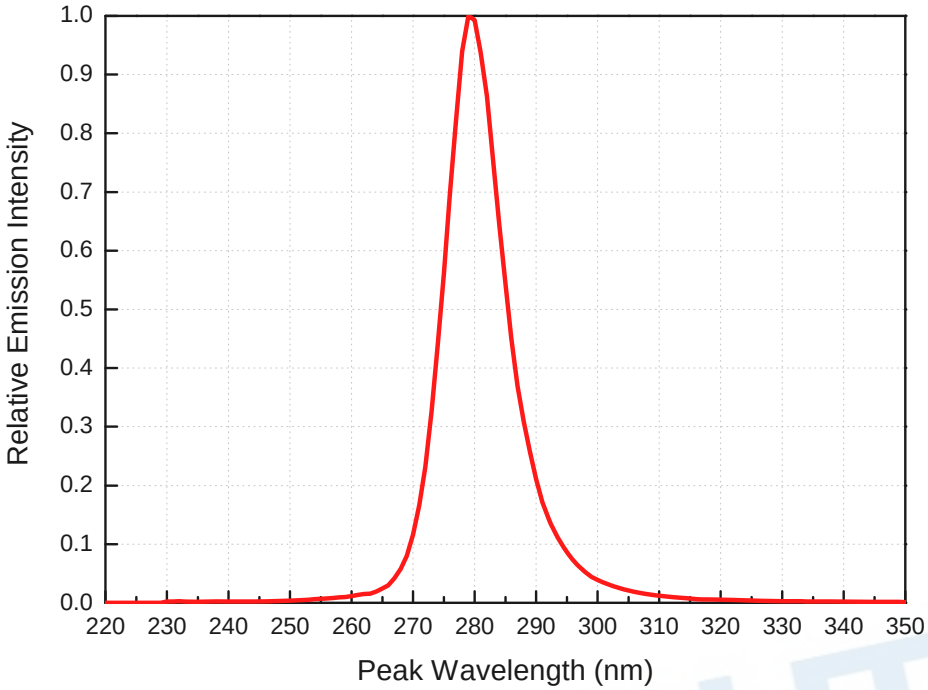

Typical Relative mW Flux vs. Forward Current
@ Soldering Pad Temperature = 25℃

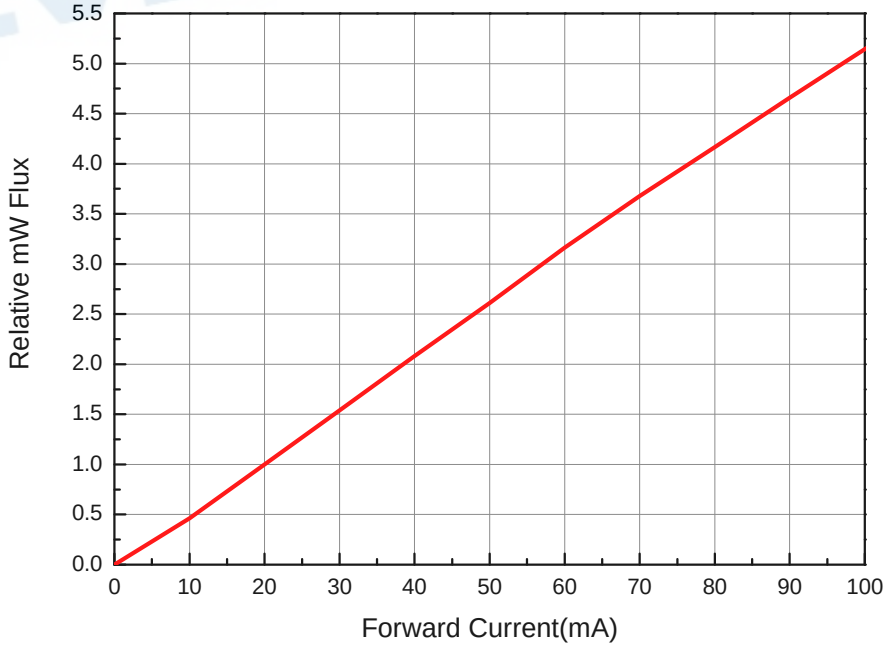

Copyright © 2020, Everlight All Rights Reserved. Release Date:07.10.2024 Issue No:DHE-0003624 Rev:8
Ver.:8 Release Date:07/26/2024 狀態:Approved(正式發行)

Peak Wavelength vs. Current
@ Soldering Pad Temperature = 25℃

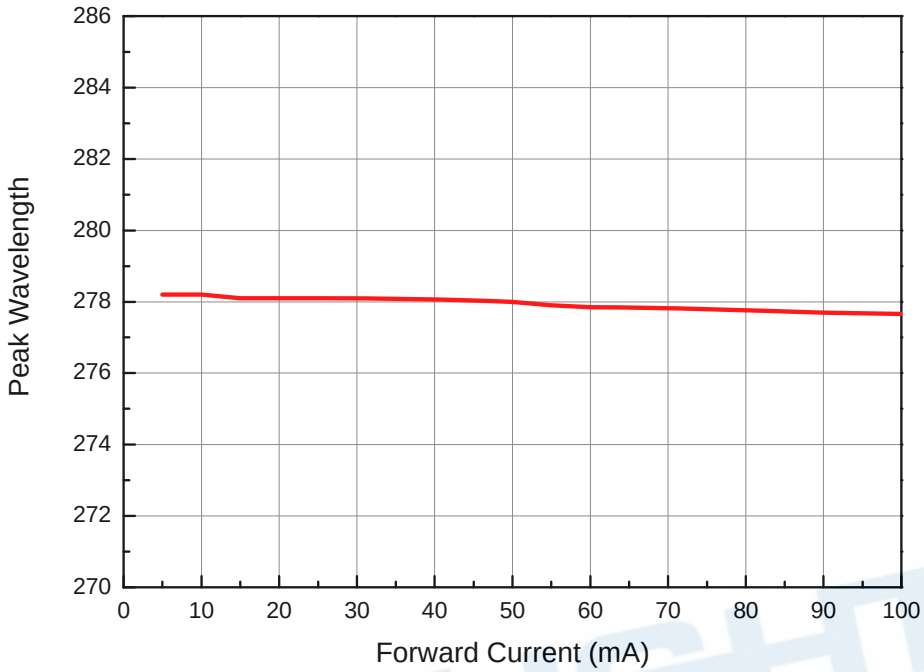

Forward Current vs. Forward Voltage
@ Soldering Pad Temperature = 25℃

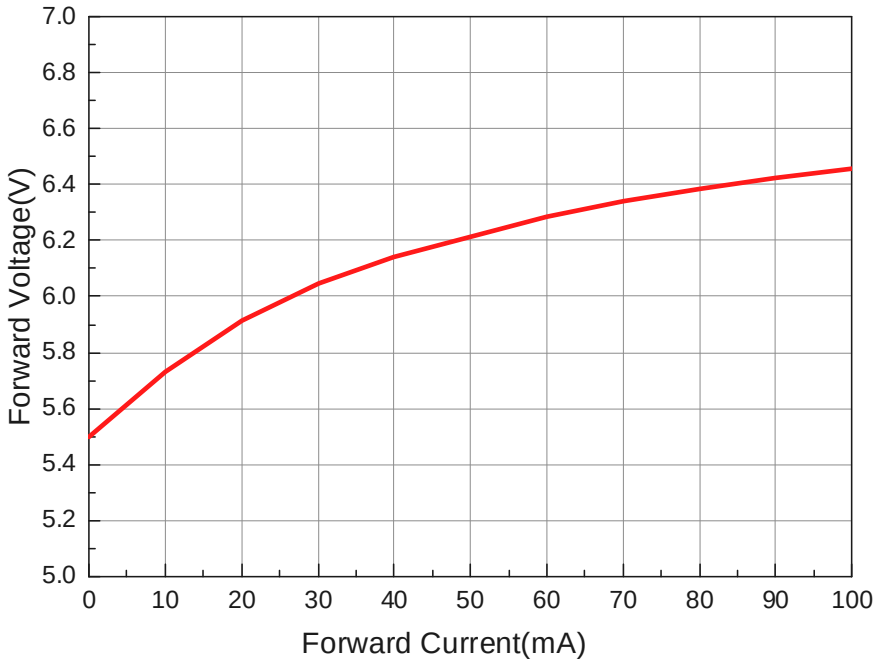

Copyright © 2020, Everlight All Rights Reserved. Release Date:07.10.2024 Issue No:DHE-0003624 Rev:8
Ver.:8 Release Date:07/26/2024 狀態:Approved(正式發行)

Relative Radiant Flux vs. Ambient Temperature

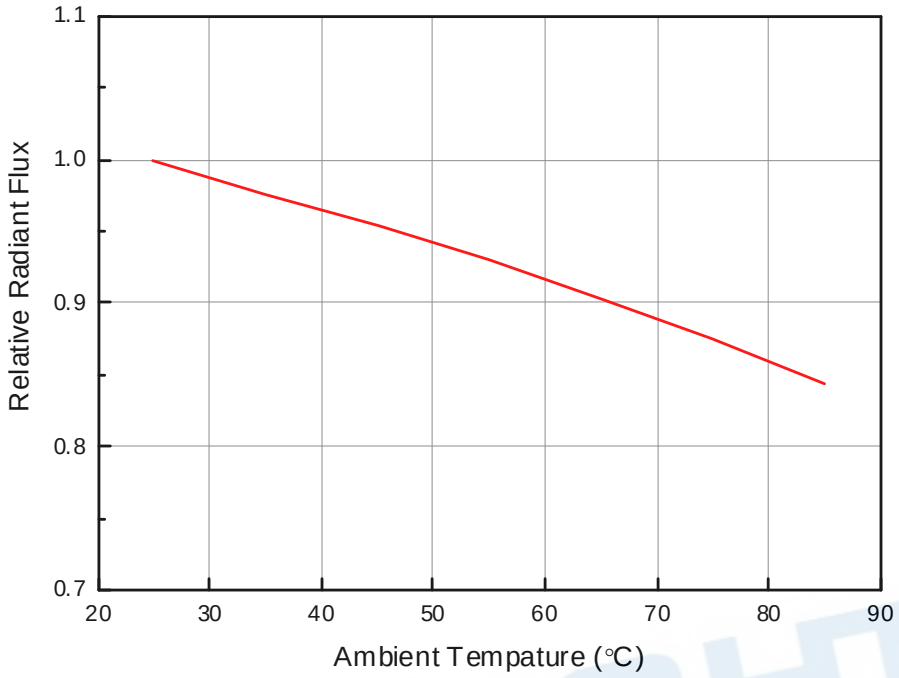

Derating Curve

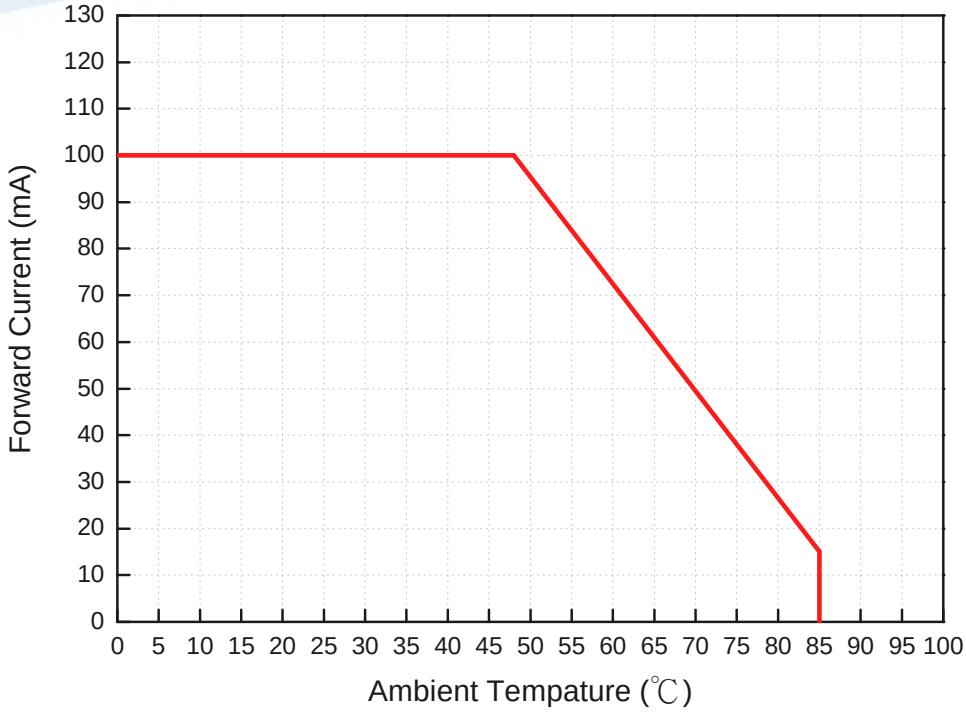

Copyright © 2020, Everlight All Rights Reserved. Release Date:07.10.2024 Issue No:DHE-0003624 Rev:8
Ver.:8 Release Date:07/26/2024 狀態:Approved(正式發行)

Typical Radiation Patterns

Typical Diagram Characteristics of Radiation for ELUC3535NUB

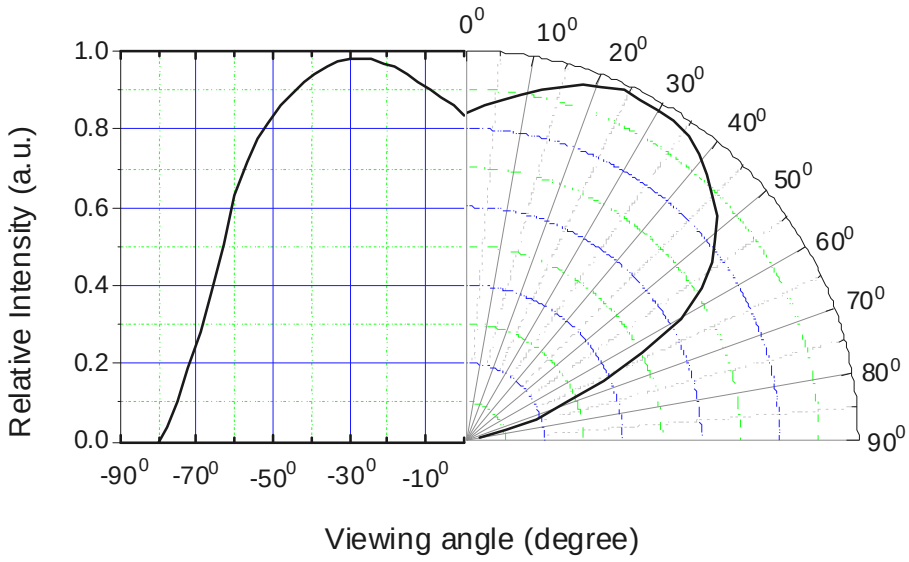

Notes:

1. $2\theta_{1/2}$ is the off axis angle from lamp centerline where the luminous intensity is 1/2 of the peak value.
2. View angle tolerance is ± 5° .

Copyright © 2020, Everlight All Rights Reserved. Release Date:07.10.2024 Issue No:DHE-0003624 Rev:8

Ver.:8 Release Date:07/26/2024 狀態:Approved(正式發行)

Emitter Tape Packaging

Carrier Tape Dimensions as the following:

Reel: 1000 pcs

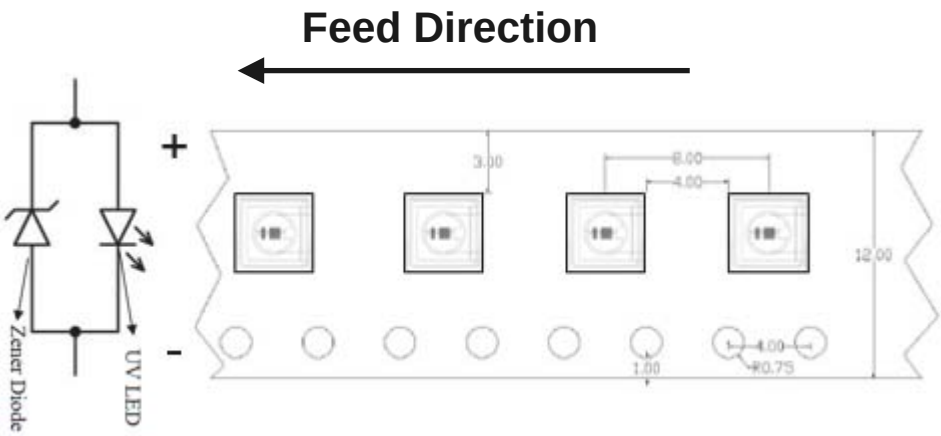

Notes:

1. Tolerance unless mentioned is ±0.2mm;
2. Minimum packing amount is 1000 pcs per reel

Moisture Resistant Packaging

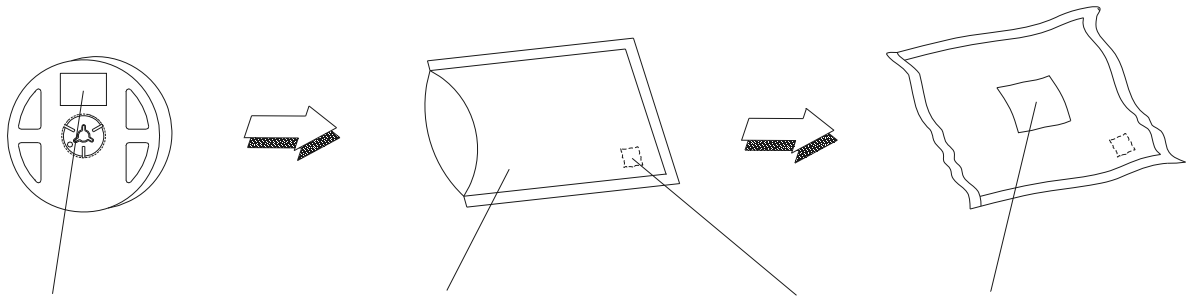

Label **Aluminum moisture-proof bag** **Desiccant** **Label**

Copyright © 2020, Everlight All Rights Reserved. Release Date:07.10.2024 Issue No:DHE-0003624 Rev:8

Ver.:8 Release Date:07/26/2024 狀態:Approved(正式發行)

Emitter Reel Dimensions

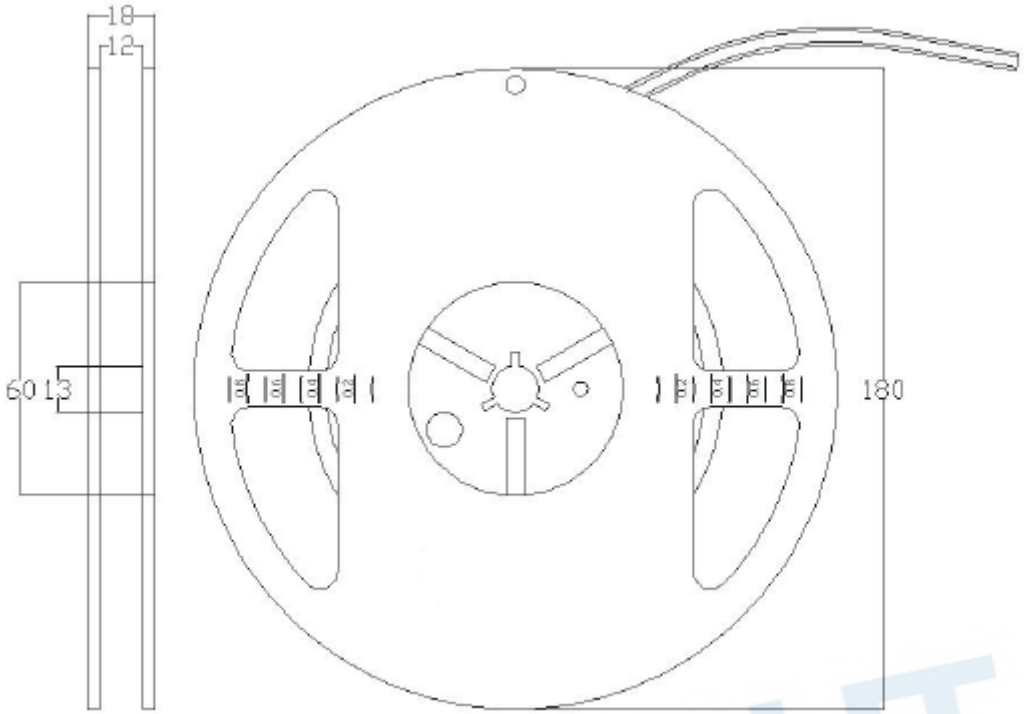

Notes:

1. Dimensions are in millimeters.
2. Tolerances unless mentioned are ±0.2mm.

Product Labeling

Label Explanation

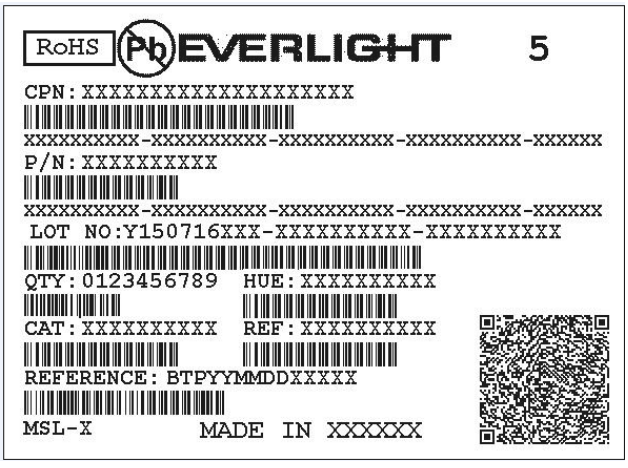

CPN: Customer Specification (when required)

P/N : Everlight Production Number

QTY: Packing Quantity

CAT: Luminous Flux (Brightness) Bin

HUE: Color Bin

REF: Forward Voltage Bin

LOT No: Lot Number

MADE IN TAIWAN: Production Place

Copyright © 2020, Everlight All Rights Reserved. Release Date:07.10.2024 Issue No:DHE-0003624 Rev:8

Ver.:8 Release Date:07/26/2024 狀態:Approved(正式發行)

Storage Conditions

- Before the package is opened: The LEDs should be stored at 30°C or less and 85%RH or less after being shipped from Everlight and the storage life limits are 1 year. The LEDs can be stored up to 3 years if in a sealed container with a nitrogen atmosphere and moisture absorbent material.
- After opening the package: The LED's floor life is 168H under 30°C or less and 60% RH or less. If unused LEDs remain, it should be stored in moisture proof packages.
- If the moisture absorbent material (silica gel) has faded away or the LEDs have exceeded the storage time, baking treatment should be performed using the following conditions. Baking treatment: 60±5℃ for 24 hours.

DISCLAIMER

- EVERLIGHT reserves the right(s) on the adjustment of product material mix for the specification.
- The product meets EVERLIGHT published specification for a period of twelve (12) months from date of shipment.
- The graphs shown in this datasheet are representing typical data only and do not show guaranteed values.
- When using this product, please observe the absolute maximum ratings and the instructions for using outlined in these specification sheets. EVERLIGHT assumes no responsibility for any damage resulting from the use of the product which does not comply with the absolute maximum ratings and the instructions included in these specification sheets.
- These specification sheets include materials protected under copyright of EVERLIGHT. Reproduction in any form is prohibited without obtaining EVERLIGHT's prior consent.
- This product is not intended to be used for military, aircraft, automotive, medical, life sustaining or life saving applications or any other application which can result in human injury or death. Please contact authorized EVERLIGHT sales agent for special application request.

Copyright © 2020, Everlight All Rights Reserved. Release Date:07.10.2024 Issue No:DHE-0003624 Rev:8

Ver.:8 Release Date:07/26/2024 狀態:Approved(正式發行)