DATASHEET

SMD-Luminosity Full Color LEDs
67-235-BJRQGCC-A01E-2T8-CS

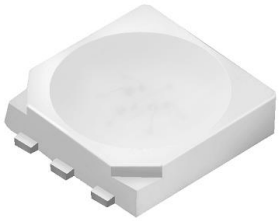

Features

. Colorless clear resin.
. White SMT package.
. Built in 3 LED chips.
. Lead frame package with individual 6 pins.
. Wide viewing angle.
. Soldering methods: Reflow soldering.
. High performance.
. Pb-free.
. The product itself will remain within RoHS compliant version.
. Compliance with EU REACH.
. Compliance Halogen Free .(Br <900 ppm ,Cl <900 ppm , Br+Cl < 1500 ppm).
. Precondition: Bases on JEDEC J-STD 020D Level 3

Description

Due to the package design, 67-235 has wide viewing angle, low power consumption and high luminous intensity. This feature makes it ideal for light pipe or lighting application.

Applications

. Amusement equipment.
. Information boards.
. Flashlight for digital camera of cellular phone.
. Lighting for small size device.

Copyright © 2010, Everlight All Rights Reserved. Release Date : 10.Apr.2019. Issue No: DSE-0009602 Rev.5

Ver.:5 Release Date:04/18/2019 狀態:Approved(正式發行)

Device Selection Guide

Chip Materials	Emitted Color	Resin Color
AlGaInP	Super-Red	Water Clear
InGaN	Brilliant Green	Water Clear
InGaN	Blue	Water Clear

Absolute Maximum Ratings (Ta=25℃)

Parameter	Symbol		Rating	Unit
Reverse Voltage	V_R	RQ	12	V
		GC/BJ	5	
Forward Current	I_F	RQ	50	mA
		GC/BJ	30	
Peak Forward Current (Duty 1/10 @1KHz)	I_{FP}		100	mA
Power Dissipation	Pd	RQ	120	mW
		GC/BJ	110	
Junction Temperature	T_j		125	℃
Operating Temperature	T_{opr}		-40 ~ +100	℃
Storage Temperature	Tstg		-40 ~ +110	℃
Thermal Resistance	Rth J-A	RQ	500	K/W
		GC/BJ	600	
	Rth J-S	RQ	300	
		GC/BJ	400	
ESD	RQ		2000	V
	GC/BJ		500	
Soldering Temperature	T_{sol}		Reflow Soldering : 260 ℃ for 30 sec. Hand Soldering : 350 ℃ for 3 sec.	

Copyright © 2010, Everlight All Rights Reserved. Release Date : 10.Apr.2019. Issue No: DSE-0009602 Rev.5

Ver.:5 Release Date:04/18/2019 狀態:Approved(正式發行)

Electro-Optical Characteristics (Ta=25℃)

Parameter	Symbol		Min.	Typ.	Max.	Unit	Condition
Luminous Intensity	Iv	RQ	450	-----	1400	mcd	I_F=20mA
		GC	1120	-----	2240		
		BJ	225	-----	450		
Viewing Angle	$2\theta_{1/2}$		-----	120	-----	deg	I_F=20mA
Peak Wavelength	λp	RQ	-----	632	-----	nm	I_F=20mA
		GC	-----	518	-----		
		BJ	-----	468	-----		
Dominant Wavelength	λd	RQ	617.5	-----	629.5	nm	I_F=20mA
		GC	525	-----	535		
		BJ	465	-----	475		
Spectrum Radiation Bandwidth	Δλ	RQ	-----	20	-----	nm	I_F=20mA
		GC	-----	35	-----		
		BJ	-----	25	-----		
Forward Voltage	V_F	RQ	1.75	-----	2.75	V	I_F=20mA
		GC	2.75	-----	3.65		
		BJ	2.75	-----	3.65		
Reverse Current	I_R	RQ	-----	-----	10	μA	V_R=12V
		GC	-----	-----	10	μA	V_R=5V
		BJ	-----	-----	10	μA	V_R=5V

Note:
1. Tolerance of Luminous Intensity: ±11%
2. Tolerance of Dominant Wavelength: ±1nm
3. Tolerance of Forward Voltage: ±0.1V

Copyright © 2010, Everlight All Rights Reserved. Release Date : 10.Apr.2019. Issue No: DSE-0009602 Rev.5

Ver.:5 Release Date:04/18/2019 狀態:Approved(正式發行)

Bin Range of Luminous Intensity

Chip	Bin Code	Min.	Max.	Unit	Condition
RQ	U1	450	560	mcd	I_F =20mA
	U2	560	710		
	V1	710	900		
	V2	900	1120		
	AA	1120	1400		
GC	AA	1120	1400		
	AB	1400	1800		
	BA	1800	2240		
BJ	S2	225	285		
	T1	285	360		
	T2	360	450		

Note:
Tolerance of Luminous Intensity: ±11%

Bin Range of Dominant Wavelength

Chip	Bin Code	Min.	Max.	Unit	Condition
RQ	E4	617.5	621.5	nm	I_F =20mA
	E5	621.5	625.5		
	E6	625.5	629.5		
GC	Y	525	530		
	Z	530	535		
BJ	X	465	470		
	Y	470	475		

Copyright © 2010, Everlight All Rights Reserved. Release Date : 10.Apr.2019. Issue No: DSE-0009602 Rev.5

Ver.:5 Release Date:04/18/2019 狀態:Approved(正式發行)

Bin Range of Forward Voltage

Chip	Bin Code	Min.	Max.	Unit	Condition
RQ	0	1.75	1.95	V	I_F =20mA
	1	1.95	2.15		
	2	2.15	2.35		
	3	2.35	2.55		
	4	2.55	2.75		
GC	5	2.75	3.05		
	6	3.05	3.35		
	7	3.35	3.65		
BJ	5	2.75	3.05		
	6	3.05	3.35		
	7	3.35	3.65		

Note:
Tolerance of Forward Voltage: ±0.1V

EVERLIGHT

Copyright © 2010, Everlight All Rights Reserved. Release Date : 10.Apr.2019. Issue No: DSE-0009602 Rev.5
www.everlight.com
Ver.:5 Release Date:04/18/2019 狀態:Approved(正式發行)

Typical Electro-Optical Characteristics Curves

Typical Curve of Spectral Distribution

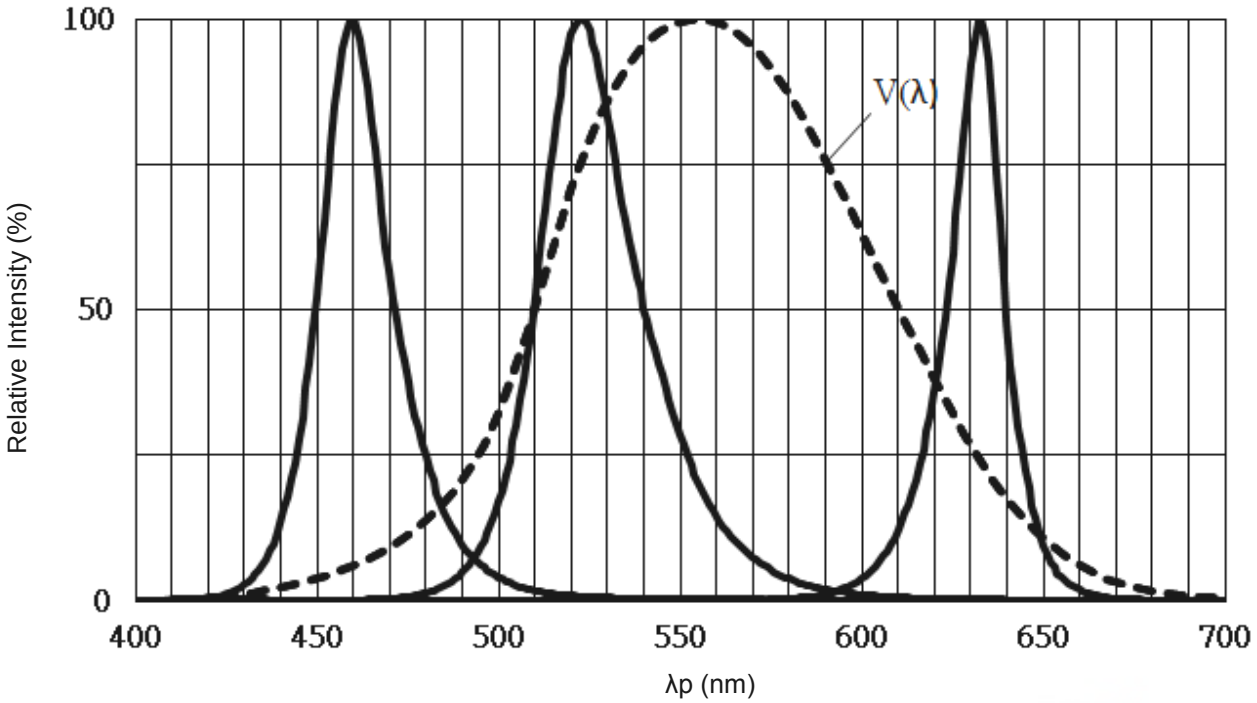

Note: V(λ)=Standard eye response curve; I_F =20mA

Diagram Characteristics of Radiation

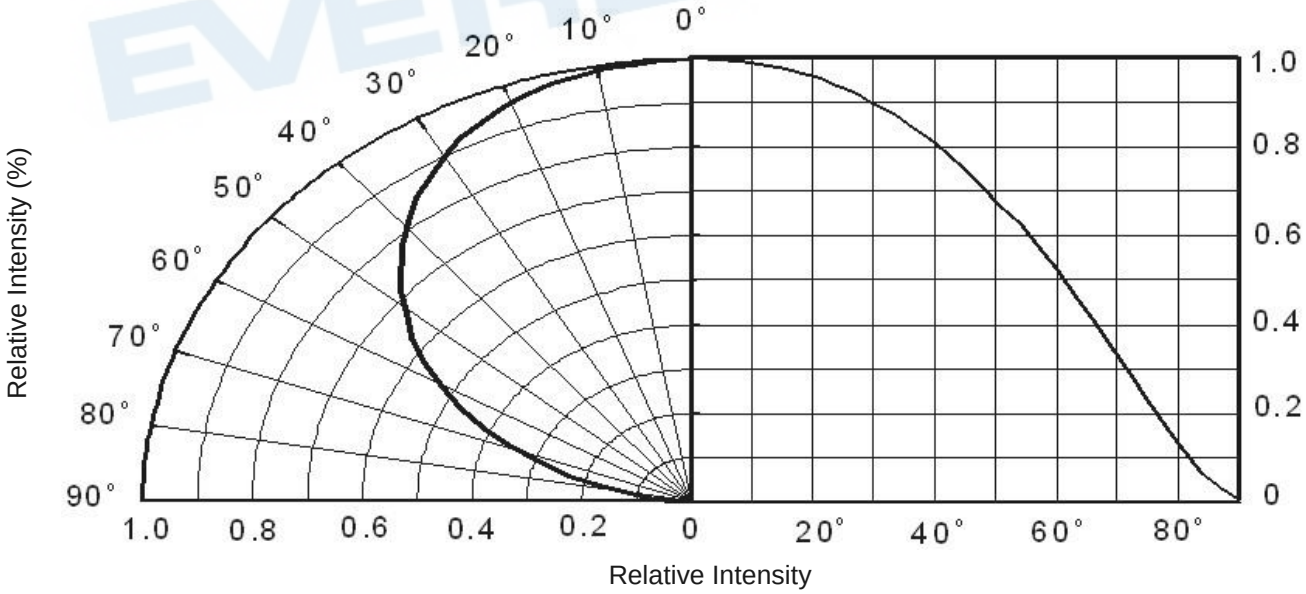

Copyright © 2010, Everlight All Rights Reserved. Release Date : 10.Apr.2019. Issue No: DSE-0009602 Rev.5
www.everlight.com
Ver.:5 Release Date:04/18/2019 狀態:Approved(正式發行)

Forward Current vs. Forward Voltage (Ta=25℃)

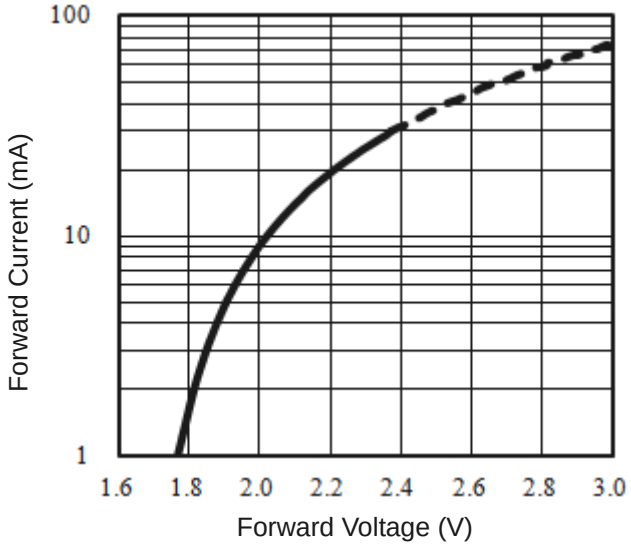

Dominant Wavelength vs. Forward Current (Ta=25℃)

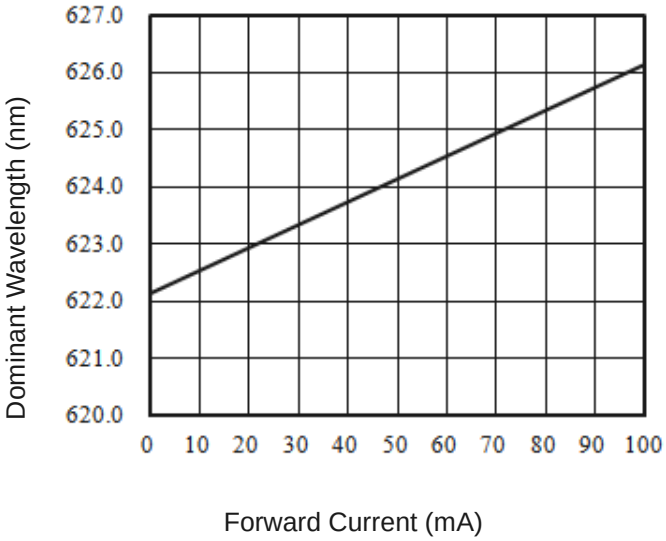

Relative Luminous Intensity vs. Forward Current (Ta=25℃)

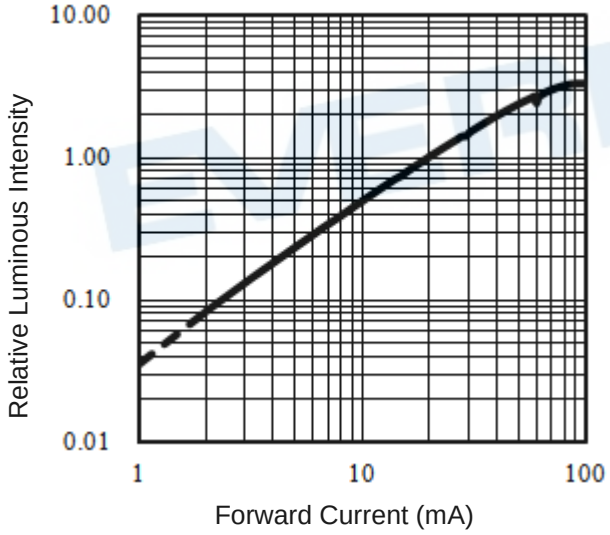

Max. Permissible Forwarded Current(Ta=25℃)

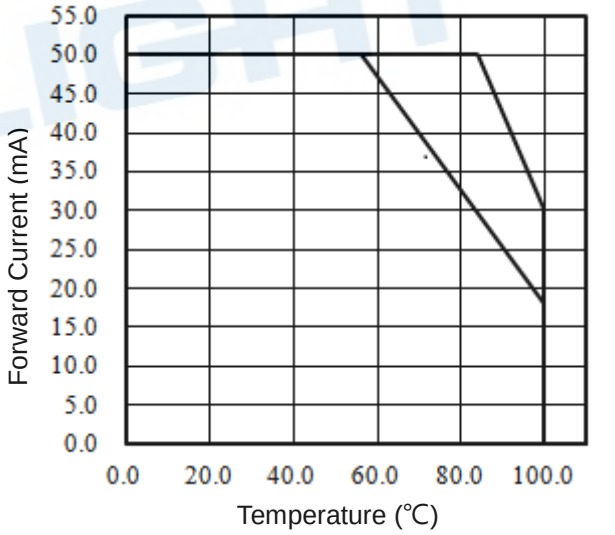

Copyright © 2010, Everlight All Rights Reserved. Release Date : 10.Apr.2019. Issue No: DSE-0009602 Rev.5
www.everlight.com
Ver.:5 Release Date:04/18/2019 狀態:Approved(正式發行)

Forward Current vs. Forward Voltage (Ta=25℃)

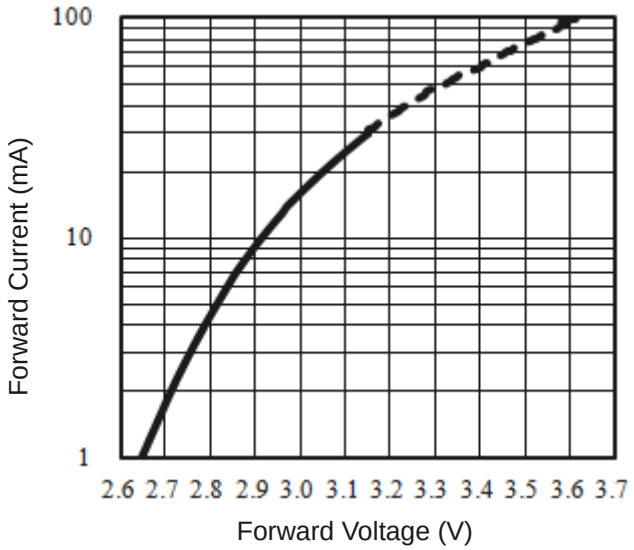

Dominant Wavelength vs. Forward Current (Ta=25℃)

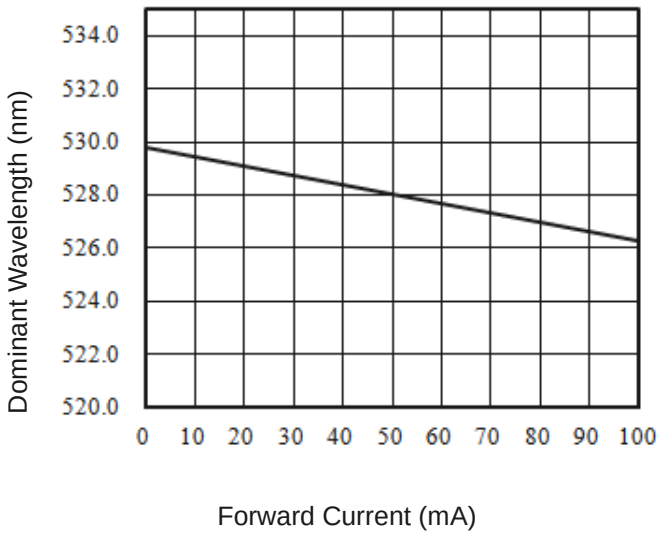

Relative Luminous Intensity vs. Forward Current (Ta=25℃)

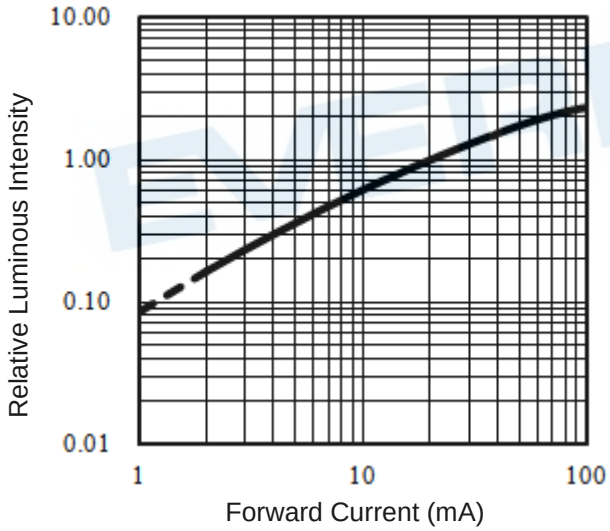

Max. Permissible Forwarded Current(Ta=25℃)

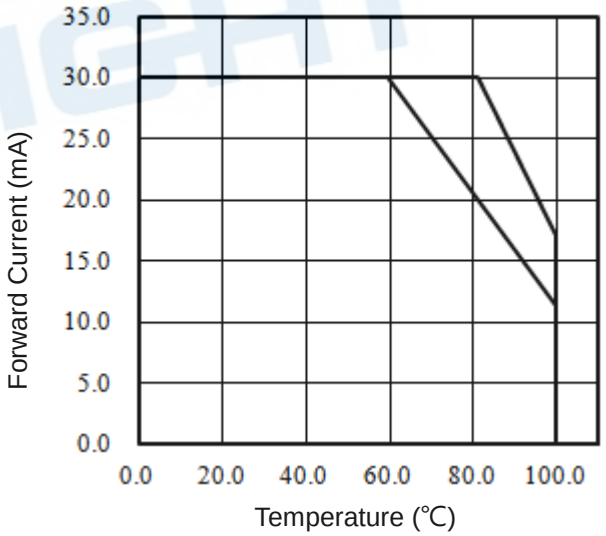

Copyright © 2010, Everlight All Rights Reserved. Release Date : 10.Apr.2019. Issue No: DSE-0009602 Rev.5
www.everlight.com
Ver.:5 Release Date:04/18/2019 狀態:Approved(正式發行)

Forward Current vs. Forward Voltage (Ta=25℃)

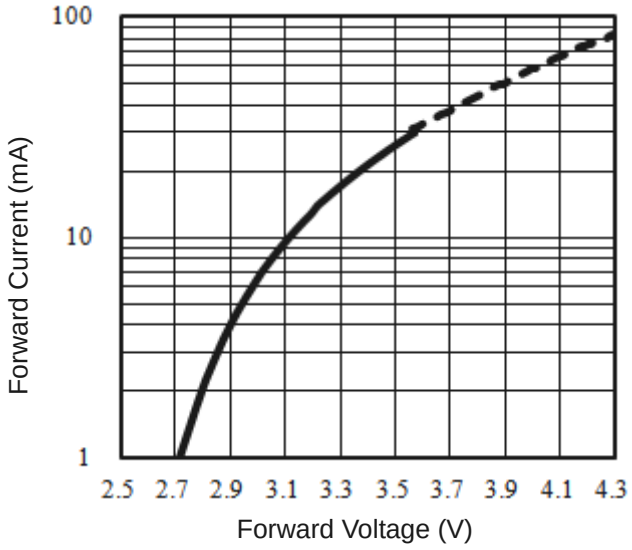

Dominant Wavelength vs. Forward Current (Ta=25℃)

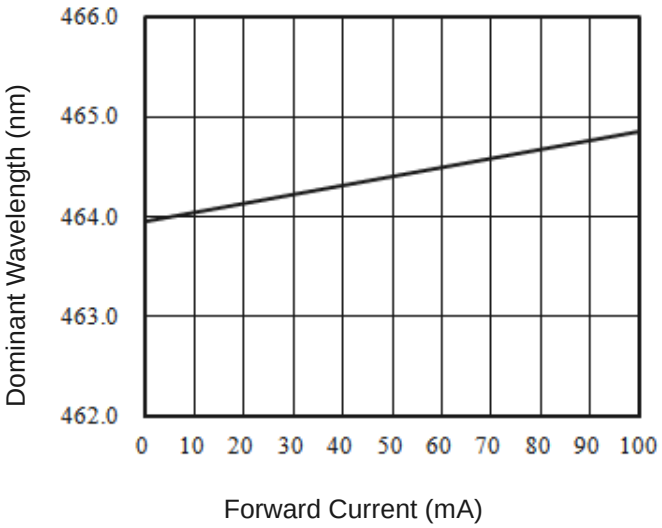

Relative Luminous Intensity vs. Forward Current (Ta=25℃)

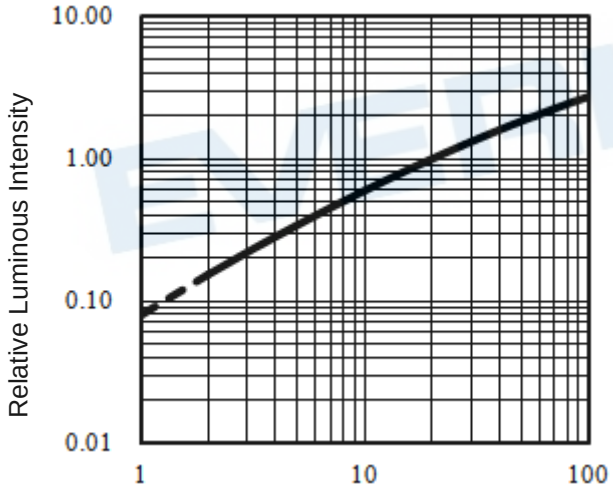

Max. Permissible Forwarded Current(Ta=25℃)

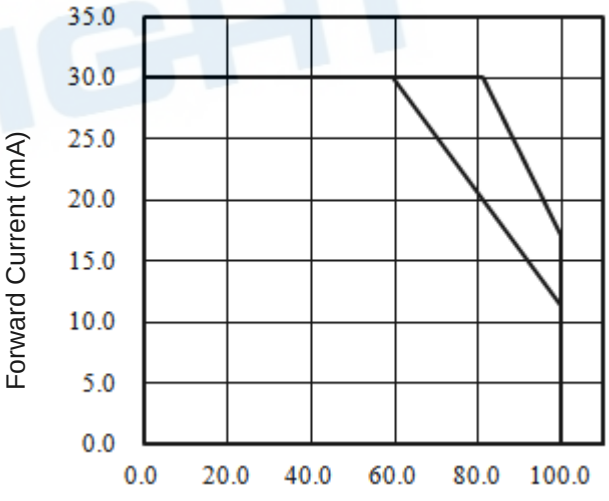

Copyright © 2010, Everlight All Rights Reserved. Release Date : 10.Apr.2019. Issue No: DSE-0009602 Rev.5
www.everlight.com
Ver.:5 Release Date:04/18/2019 狀態:Approved(正式發行)

Package Dimension

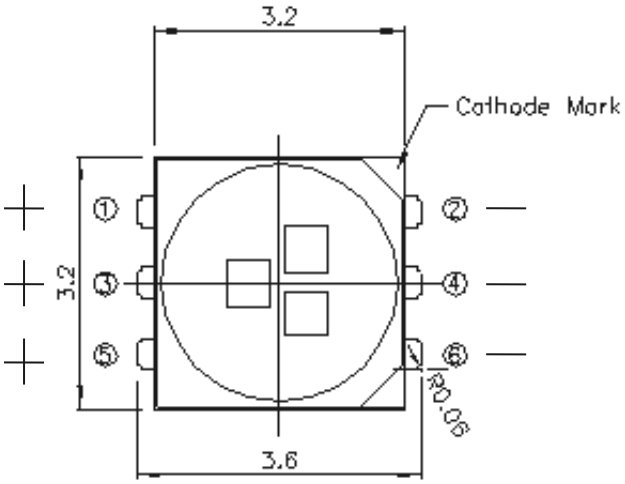

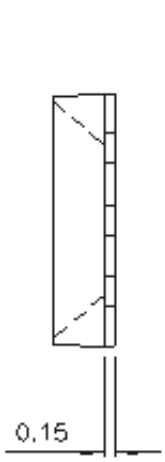

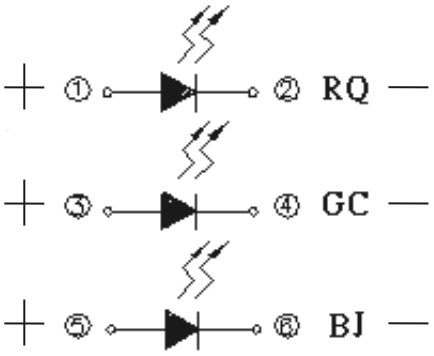

Polarity

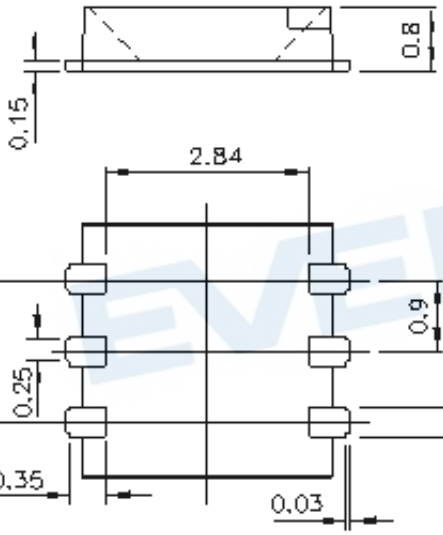

Recommended soldering pad design

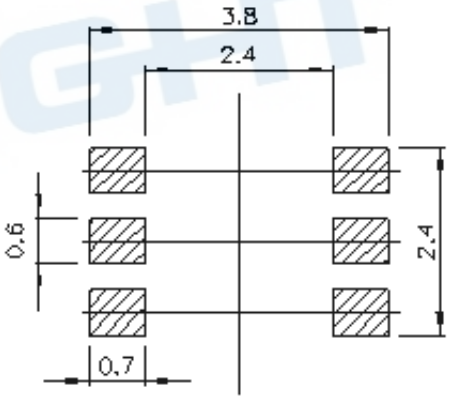

Note: Tolerances unless mentioned ±0.1mm. Unit = mm

Copyright © 2010, Everlight All Rights Reserved. Release Date : 10.Apr.2019. Issue No: DSE-0009602 Rev.5

Ver.:5 Release Date:04/18/2019 狀態:Approved(正式發行)

Moisture Resistant Packing Materials

Label Explanation

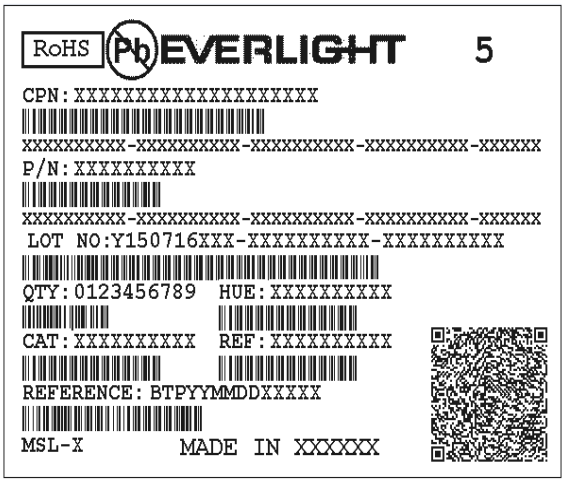

- CPN: Customer's Product Number
- P/N: Product Number
- QTY: Packing Quantity
- CAT: Luminous Intensity Rank
- HUE: Dom. Wavelength Rank
- REF: Forward Voltage Rank
- LOT No: Lot Number

Reel Dimensions

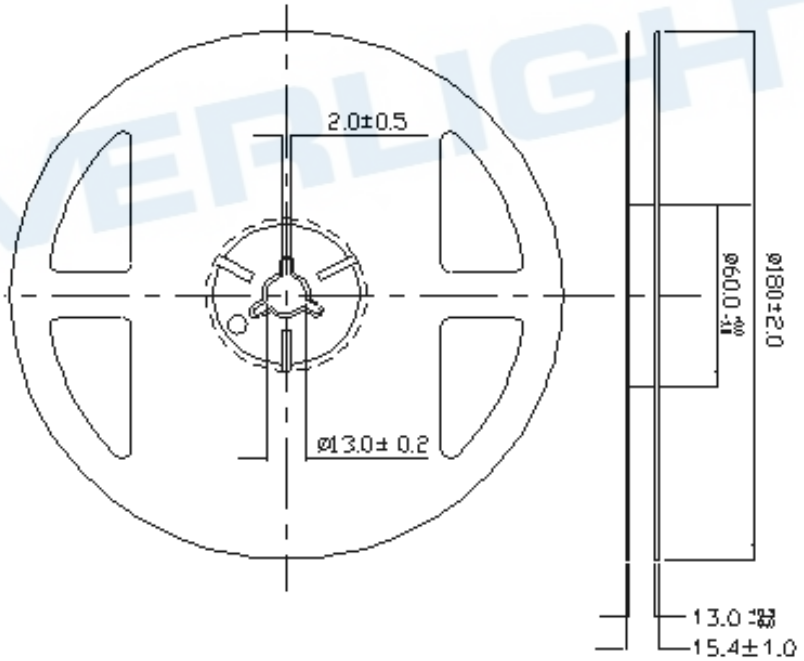

Copyright © 2010, Everlight All Rights Reserved. Release Date : 10.Apr.2019. Issue No: DSE-0009602 Rev.5
www.everlight.com
Ver.:5 Release Date:04/18/2019 狀態:Approved(正式發行)

Carrier Tape Dimensions: Loaded Quantity 2000 pcs Per Reel

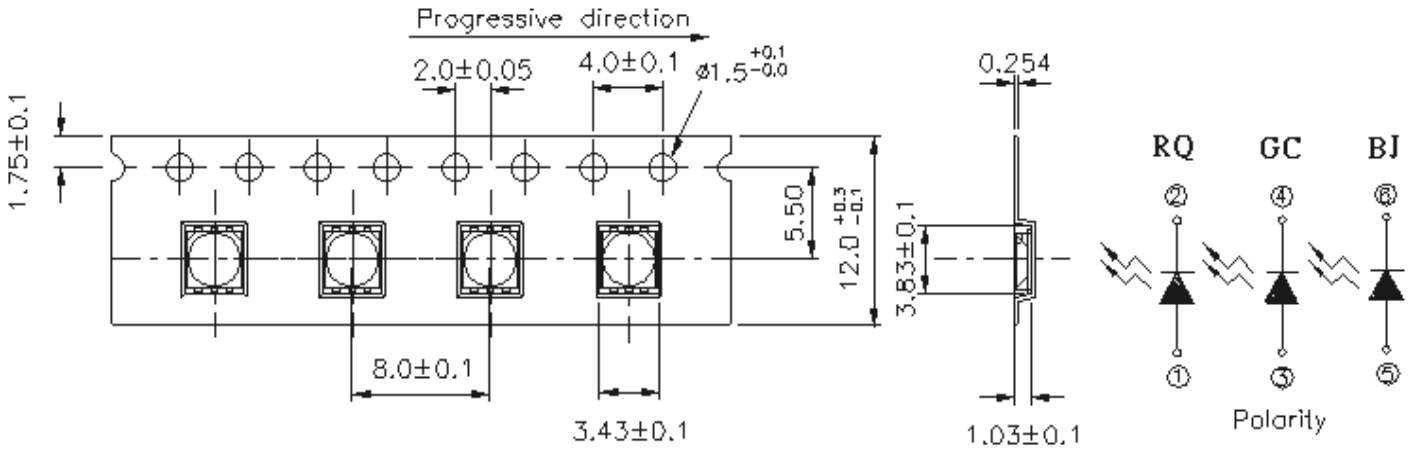

Note: Tolerances unless mentioned ±0.1mm. Unit = mm

Moisture Resistant Packing Process

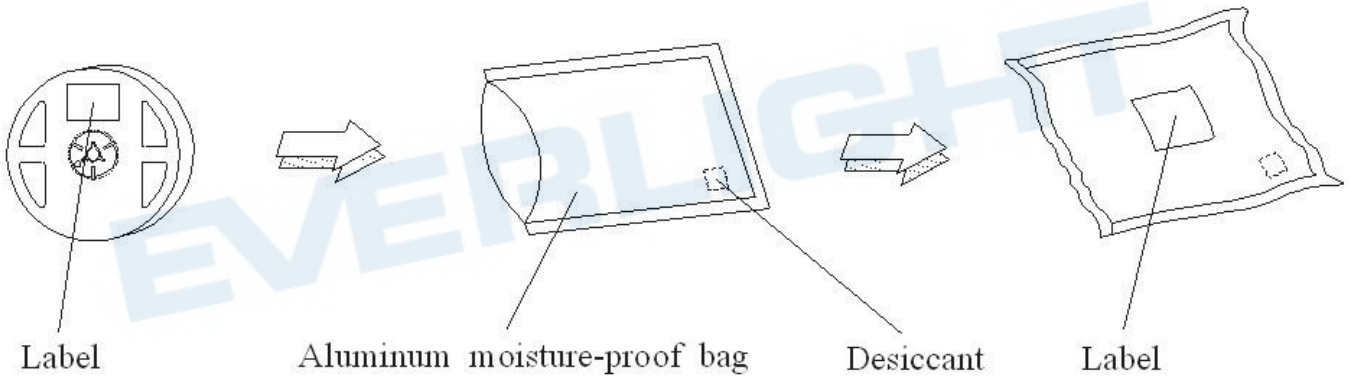

Note: Tolerances unless mentioned ±0.1mm. Unit = mm

Copyright © 2010, Everlight All Rights Reserved. Release Date : 10.Apr.2019. Issue No: DSE-0009602 Rev.5

Ver.:5 Release Date:04/18/2019 狀態:Approved(正式發行)

Precautions for Use

1. Over-current-proof
   1.1 Customer must apply resistors for protection, otherwise slight voltage shift will cause big current change (Burn out will happen).

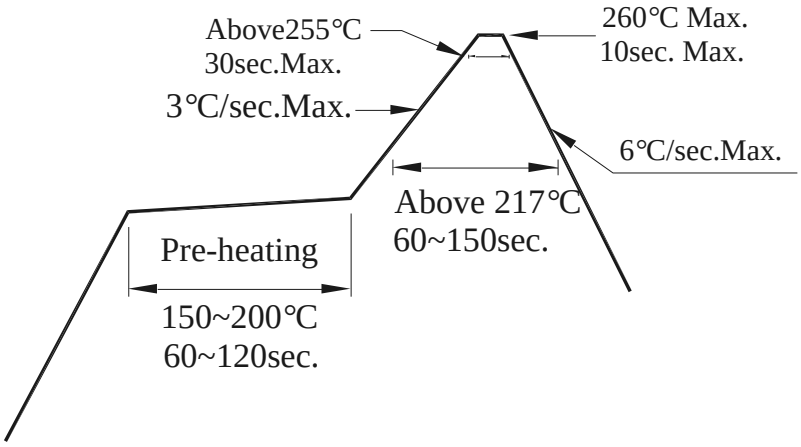

2. Storage
   2.1 Moisture proof bag should only be opened immediately prior to usage.
   2.2 Environment should be less than 30℃ and 60% RH when moisture proof bag is opened.
   2.3 After opening the package MSL Conditions stated on page 1 of this spec should not be exceeded.
   2.4 If the moisture sensitivity card indicates higher than acceptable moisture, the component should be baked at min. 60deg +/-5deg for 24 hours.
3. Soldering Condition
   3.1 Pb-free solder temperature profile
   3.2 Reflow soldering should not be done more than two times.
   3.3 When soldering, do not put stress on the LEDs during heating.
   3.4 After soldering, do not warp the circuit board.
4. Soldering Iron
   Each terminal is to go to the tip of soldering iron temperature less than 350℃ for 3 seconds within once in less than the soldering iron capacity 25W. Leave two seconds and more intervals, and do soldering of each terminal. Be careful because the damage of the product is often started at the time of the hand solder.
5. Repairing
   Repair should not be done after the LEDs have been soldered. When repairing is unavoidable, a double-head soldering iron should be used (as below figure). It should be confirmed beforehand whether the characteristics of the LEDs will or will not be damaged by repairing.

Application Restrictions

High reliability applications such as military/aerospace, automotive safety/security systems, and medical equipment may require different product. If you have any concerns, please contact Everlight before using this product in your application. This specification guarantees the quality and performance of the product as an individual component. Do not use this product beyond the specification described in this document.

Copyright © 2010, Everlight All Rights Reserved. Release Date : 10.Apr.2019. Issue No: DSE-0009602 Rev.5

Ver.:5 Release Date:04/18/2019 狀態:Approved(正式發行)

DISCLAIMER

1. EVERLIGHT reserves the right(s) on the adjustment of product material mix for the specification.
2. The product meets EVERLIGHT published specification for a period of twelve (12) months from date of shipment.
3. The graphs shown in this datasheet are representing typical data only and do not show guaranteed values.
4. When using this product, please observe the absolute maximum ratings and the instructions for using outlined in these specification sheets. EVERLIGHT assumes no responsibility for any damage resulting from the use of the product which does not comply with the absolute maximum ratings and the instructions included in these specification sheets.
5. These specification sheets include materials protected under copyright of EVERLIGHT. Reproduction in any form is prohibited without obtaining EVERLIGHT's prior consent.
6. This product is not intended to be used for military, aircraft, automotive, medical, life sustaining or life saving applications or any other application which can result in human injury or death. Please contact authorized Everlight sales agent for special application request.

EVERLIGHT

Copyright © 2010, Everlight All Rights Reserved. Release Date : 10.Apr.2019. Issue No: DSE-0009602 Rev.5

Ver.:5 Release Date:04/18/2019 狀態:Approved(正式發行)