Technical Data Sheet

Top View LEDs

67-21/S2C-AQ2S1B/2T



Features

- P-LCC-2 package.
- White package.
- Optical indicator.
- Colorless clear window.
- Wide viewing angle.
- Suitable for vapor-phase reflow, Infrared reflow and wave solder processes.
- Computable with automatic placement equipment.
- Available on tape and reel (8mm Tape).
- Pb-free.
- The product itself will remain within RoHS compliant version.

Descriptions

- The 67-21 series is available in soft orange, green, blue and yellow. Due to the package design, the LED has wide viewing angle and optimized light coupling by inter reflector. This feature makes the SMT TOP LED ideal for light pipe application. The low current requirement makes this device ideal for portable equipment or any other application where power is at a premium.

Applications

- Automotive: backlighting in dashboard and switch.
- Telecommunication: indicator and backlighting in telephone and fax.
- Flat backlight for LCD, switch and symbol.
- Light pipe application.
- General use.

Device Selection Guide

Chip Material	Emitted Color	Resin Color
AlGaInP	Brilliant Orange	Water Clear

Ver.:2 Release Date:03/20/2017 狀態:Approved(正式發行)

Technical Data Sheet

Top View LEDs

67-21/S2C-AQ2S1B/2T

Package Dimensions

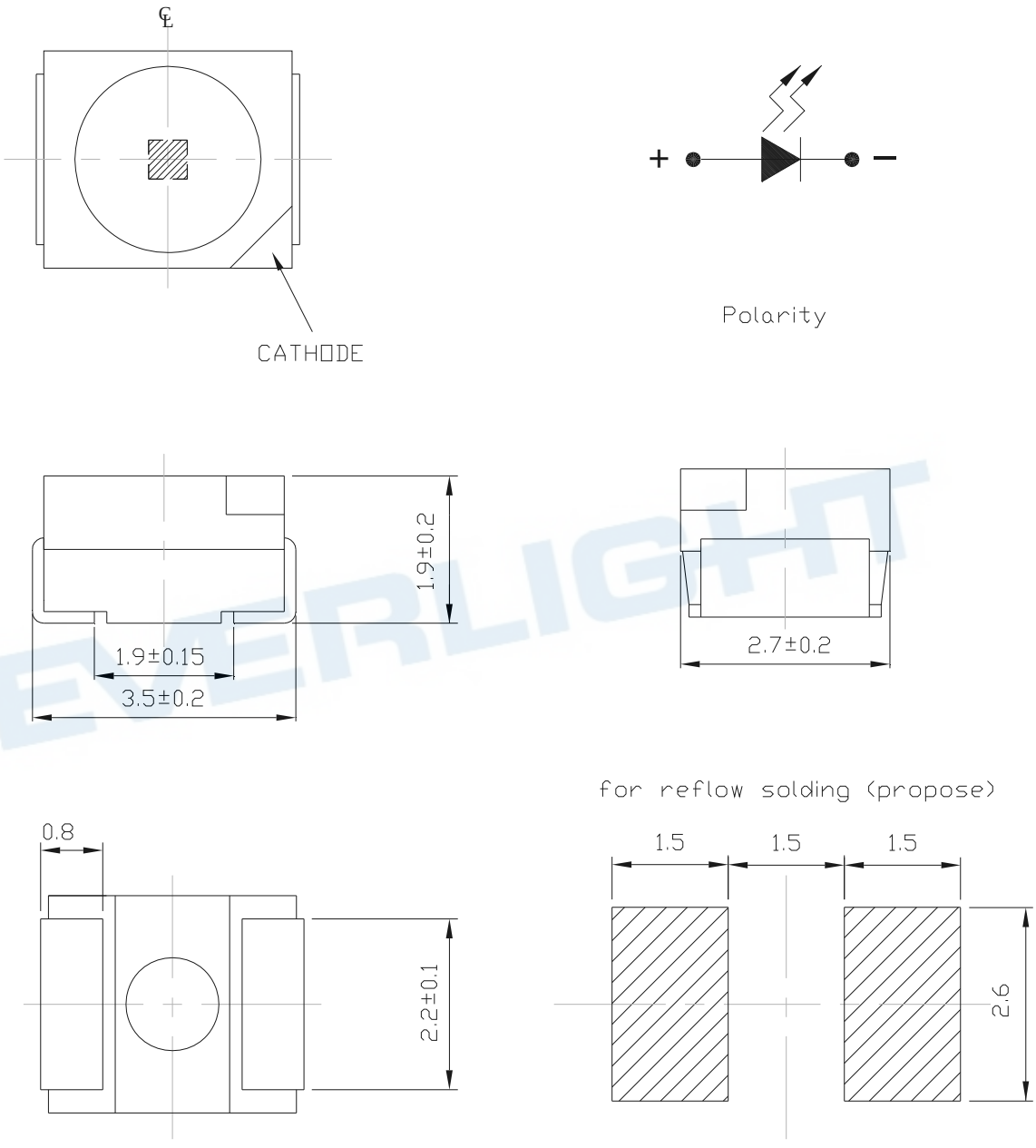

Note: The tolerances unless mentioned is ±0.1mm; Unit = mm

Ver.:2 Release Date:03/20/2017 狀態:Approved(正式發行)

Technical Data Sheet

Top View LEDs

67-21/S2C-AQ2S1B/2T

Absolute Maximum Ratings (Ta=25℃)

Parameter	Symbol	Rating	Unit
Reverse Voltage	V_R	12	V
Forward Current	I_F	25	mA
Peak Forward Current (Duty 1/10 @1KHz)	I_{FP}	60	mA
Power Dissipation	Pd	60	mW
Electrostatic Discharge(HBM)	ESD	2000	V
Operating Temperature	Topr	-40 ~ +85	℃
Storage Temperature	Tstg	-40 ~ +90	℃
Soldering Temperature	Tsol	Reflow Soldering : 260 ℃ for 10 sec. Hand Soldering : 350 ℃ for 3 sec.	

Electro-Optical Characteristics (Ta=25℃)

Parameter	Symbol	Min.	Typ.	Max.	Unit	Condition
Luminous Intensity	I_V	90	-----	225	mcd	I_F=20mA
Viewing Angle	2θ1/2	-----	120	-----	deg	I_F=20mA
Peak Wavelength	λp	-----	611	-----	nm	I_F=20mA
Dominant Wavelength	λd	600.5	-----	612.5	nm	I_F=20mA
Spectrum Radiation Bandwidth	△λ	-----	15	-----	nm	I_F=20mA
Forward Voltage	V_F	1.75	-----	2.35	V	I_F=20mA
Reverse Current	I_R	-----	-----	10	μA	V_R=12V

Notes:

1. Tolerance of Luminous Intensity: ±11%
2. Tolerance of Dominant Wavelength: ±1nm
3. Tolerance of Forward Voltage: 0.1V

Ver.:2 Release Date:03/20/2017 狀態:Approved(正式發行)

67-21/S2C-AQ2S1B/2T

Bin Range of Dominant Wavelength

Group	Bin Code	Min.	Max.	Unit	Condition
A	D8	600.5	603.5	nm	I_F=20mA
	D9	603.5	606.5		
	D10	606.5	609.5		
	D11	609.5	612.5		

Bin Code Range of Luminous Intensity

Bin Code	Min	Max	Unit	Condition
Q2	90	112	mcd	I_F=20mA
R1	112	140		
R2	140	180		
S1	180	225		

Bin Code Range of Forward Voltage

Bin Code	Min	Max	Unit	Condition
0	1.75	1.95	V	I_F=20mA
1	1.95	2.15		
2	2.15	2.35		

Notes:

1. Tolerance of Luminous Intensity: ±11%
2. Tolerance of Dominant Wavelength: ±1nm
3. Tolerance of Forward Voltage: 0.1V

Ver.:2 Release Date:03/20/2017 狀態:Approved(正式發行)

67-21/S2C-AQ2S1B/2T

Typical Electro-Optical Characteristics Curves

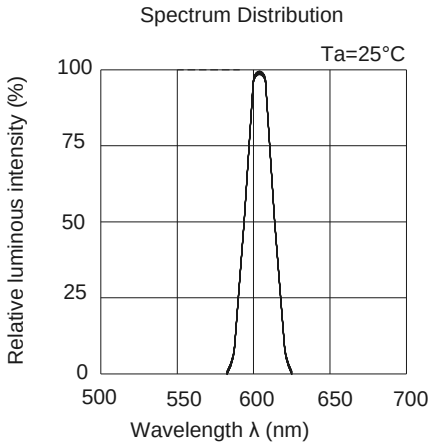

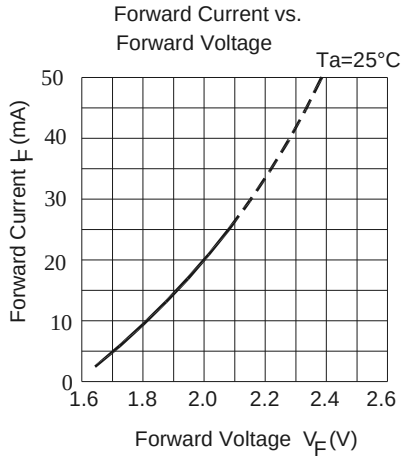

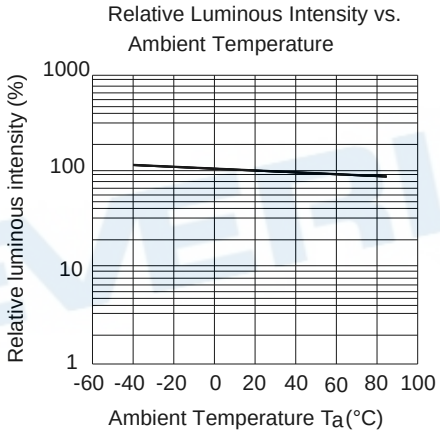

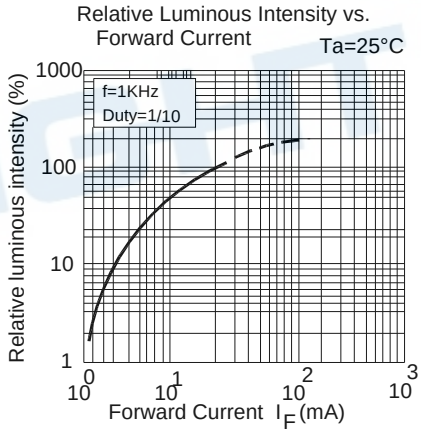

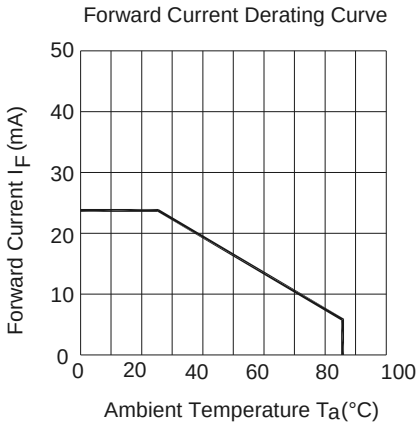

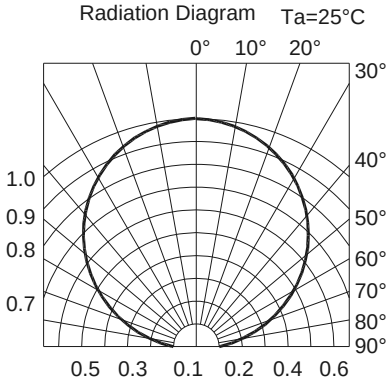

67-21/S2C-AQ2S1B/2T

Label Explanation

CAT: Luminous Intensity Rank
HUE: Dom. Wavelength Rank
REF: Forward Voltage Rank



Reel Dimensions

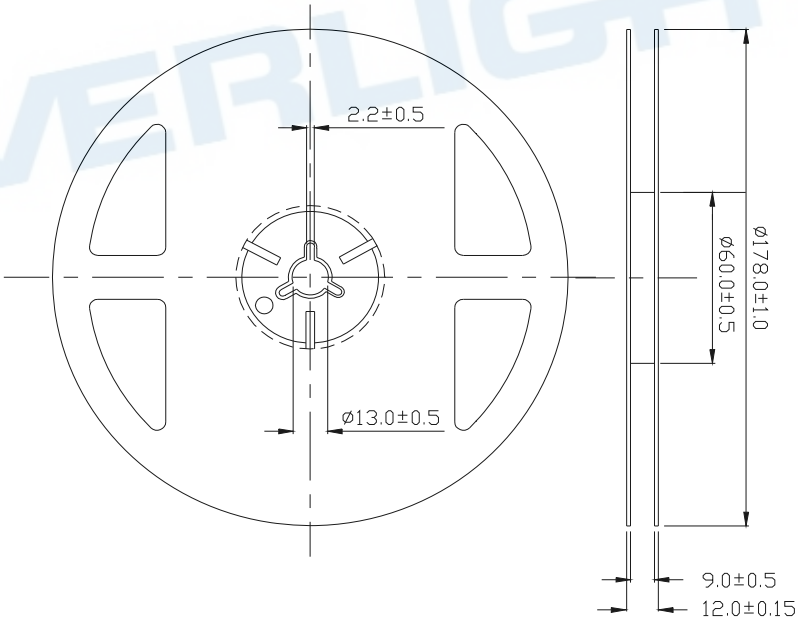

Note: The tolerances unless mentioned is ±0.1mm; Unit = mm

67-21/S2C-AQ2S1B/2T

Carrier Tape Dimensions: Loaded Quantity 2000 pcs Per Reel.

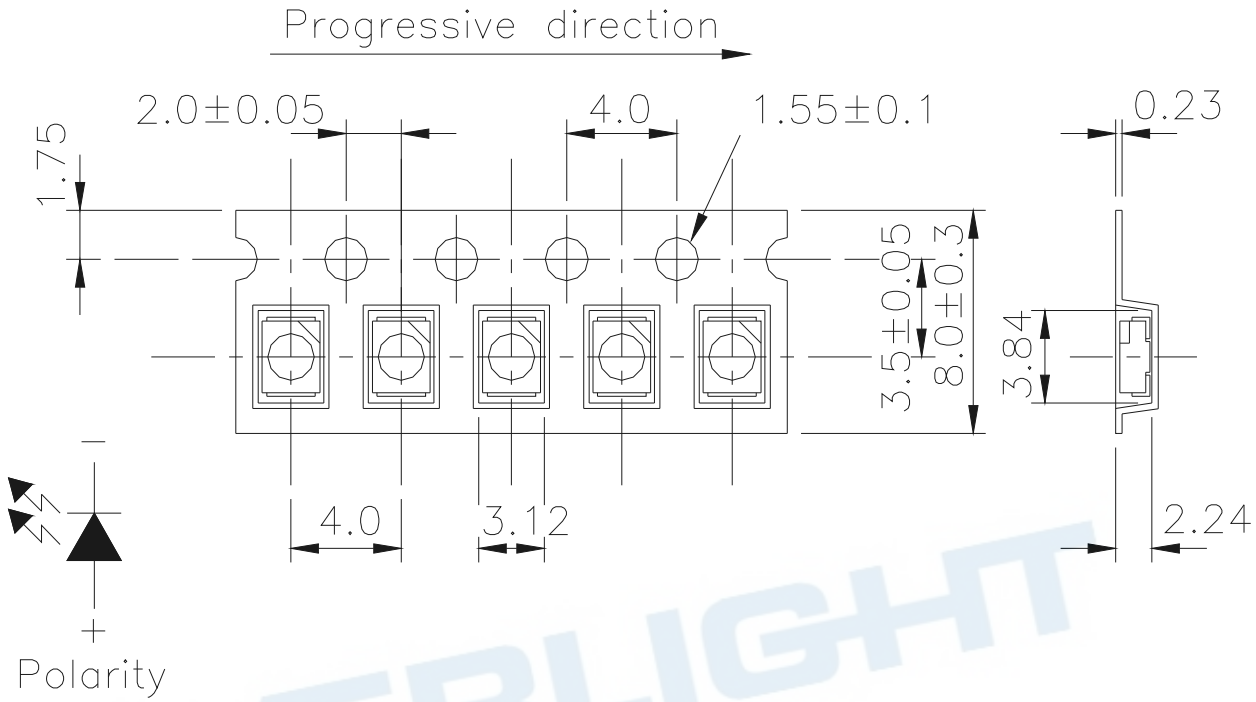

Note: The tolerances unless mentioned is ±0.1mm; Unit = mm

Moisture Resistant Packaging

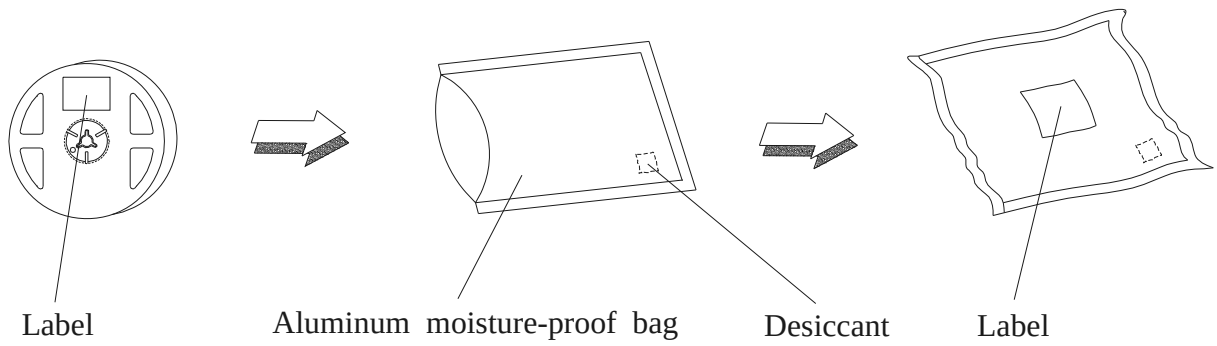

67-21/S2C-AQ2S1B/2T

Reliability Test Items and Conditions

The reliability of products shall be satisfied with items listed below.
Confidence level：90%
LTPD：10%

No.	Items	Test Condition	Test Hours/Cycles	Sample Size	Ac/Re
1	Reflow Soldering	Temp. : 260℃±5℃ Min. 5sec.	6 Min.	22 PCS.	0/1
2	Temperature Cycle	H : +100℃ 15min ∫ 5 min L : -40℃ 15min	300 Cycles	22 PCS.	0/1
3	Thermal Shock	H : +100℃ 5min ∫ 10 sec L : -10℃ 5min	300 Cycles	22 PCS.	0/1
4	High Temperature Storage	Temp. : 100℃	1000 Hrs.	22 PCS.	0/1
5	Low Temperature Storage	Temp. : -40℃	1000 Hrs.	22 PCS.	0/1
6	DC Operating Life	I_F = 20 mA	1000 Hrs.	22 PCS.	0/1
7	High Temperature / High Humidity	85℃/ 85%RH	1000 Hrs.	22 PCS.	0/1

Ver.:2 Release Date:03/20/2017 狀態:Approved(正式發行)

Precautions For Use

1. Over-current-proof

   Customer must apply resistors for protection, otherwise slight voltage shift will cause big current change (Burn out will happen).

2. Storage

   2.1 Do not open moisture proof bag before the products are ready to use.

   2.2 Before opening the package: The LEDs should be kept at 30℃ or less and 90%RH or less.

   2.3 After opening the package: The LED's floor life are 168 hours under 30℃ or less and 60% RH or less. If unused LEDs remain, it should be stored in moisture proof packages.

   2.4 If the moisture absorbent material (silica gel) has faded away or the LEDs have exceeded the storage time, baking treatment should be performed using the following conditions. Baking treatment : 60±5℃ for 24 hours.

3. Soldering Condition

   3.1 Pb-free solder temperature profile

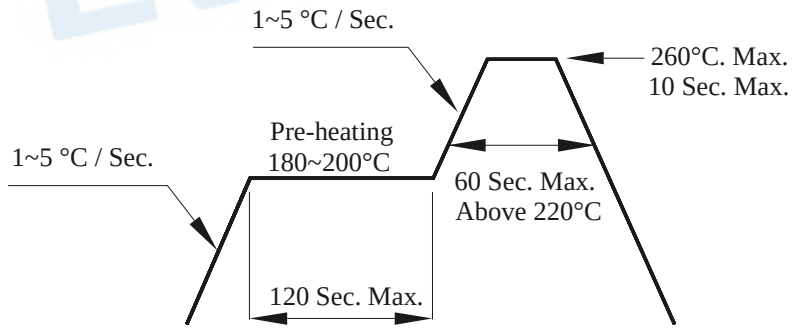

   3.2 Reflow soldering should not be done more than two times.

   3.3 When soldering, do not put stress on the LEDs during heating.

   3.4 After soldering, do not warp the circuit board.

4. Soldering Iron

Each terminal is to go to the tip of soldering iron temperature less than 350℃ for 3 seconds within once in less than the soldering iron capacity 25W. Leave two seconds and more intervals, and do soldering of each terminal. Be careful because the damage of the product is often started at the time of the hand solder.

5. Repairing

Repair should not be done after the LEDs have been soldered. When repairing is unavoidable, a double-head soldering iron should be used (as below figure). It should be confirmed beforehand whether the characteristics of the LEDs will or will not be damaged by repairing.

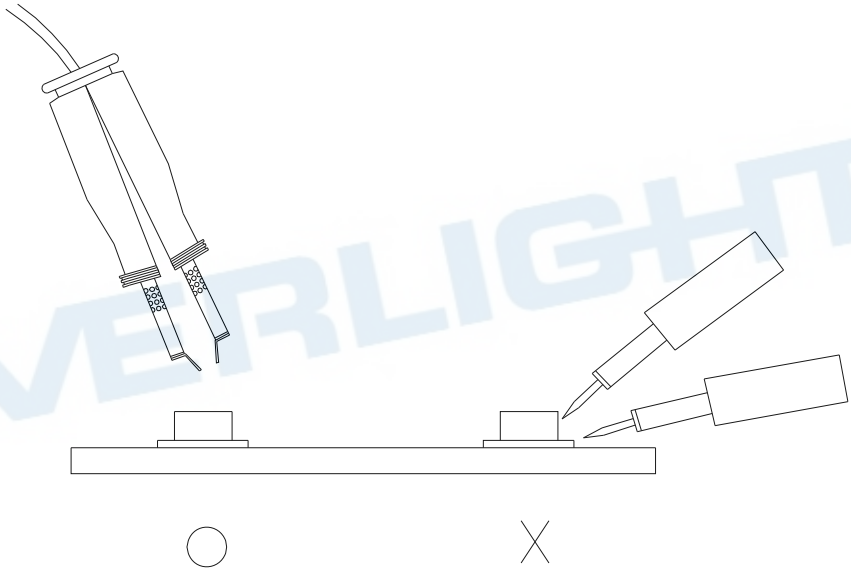

67-21/S2C-AQ2S1B/2T

DISCLAIMER

1. EVERLIGHT reserves the right(s) on the adjustment of product material mix for the specification.
2. The product meets EVERLIGHT published specification for a period of twelve (12) months from date of shipment.
3. The graphs shown in this datasheet are representing typical data only and do not show guaranteed values.
4. When using this product, please observe the absolute maximum ratings and the instructions for using outlined in these specification sheets. EVERLIGHT assumes no responsibility for any damage resulting from the use of the product which does not comply with the absolute maximum ratings and the instructions included in these specification sheets.
5. These specification sheets include materials protected under copyright of EVERLIGHT. Reproduction in any form is prohibited without obtaining EVERLIGHT's prior consent.
6. This product is not intended to be used for military, aircraft, automotive, medical, life sustaining or life saving applications or any other application which can result in human injury or death. Please contact authorized Everlight sales agent for special application request.

EVERLIGHT ELECTRONICS CO., LTD.
Office: No 25, Lane 76, Sec 3, Chung Yang Rd,
Tucheng, Taipei 236, Taiwan, R.O.C
Tel: 886-2-2267-2000, 2267-9936
Fax: 886-2267-6244, 2267-6189, 2267-6306
http://www.everlight.com

Ver.:2 Release Date:03/20/2017 狀態:Approved(正式發行)