DATASHEET

EVERLIGHT AUTOMOTIVE

EL3534-RGBISE0391L-AM



Features

- SMARTLED package with RGB color complies with ISELED protocol
- Package size: 3.5 x 3.4 x 1.35 mm
- Color: Red 620nm, Green 530nm, Blue 468nm
- Typical Luminous Intensity W: 1400mcd @D65
- Calibrated to D65: CIE x = 0.3127, CIE y = 0.3290
- Viewing angle: 120 °
- ESD(HBM): up to 2KV
- MSL: 2
- The product itself will remain within RoHS compliant version
- Compliance with EU REACH
- Compliance Halogen Free (Br<900ppm, Cl<900ppm, Br+Cl<1500ppm)
- LED: AEC-Q102 Qualified and Driving IC: AEC-Q100 Qualified
- Sulfur robustness : Class A0

Applications

- **Automotive Interior Lighting**

1. Characteristics

Parameter		Symbol	Min.	Typ.	Max.	Unit	Condition
Luminous Intensity [1][2]	Red	I_{V_R}		410		mcd	(255,0,0)
	Green	I_{V_G}		880		mcd	(0,255,0)
	Blue	I_{V_B}		110		mcd	(0,0,255)
	White	I_{V_W}		1400		mcd	(255,255,255)
Current	Red	I_R	-	12.5	-	mA	(255,0,0)
	Green	I_G	-	9.5	-	mA	(0,255,0)
	Blue	I_B	-	7	-	mA	(0,0,255)
	White	I_W	-	26	-	mA	(255,255,255)
Dominant Wavelength [3]	Red	λ_D	-	620	-	nm	(255,0,0)
	Green	λ_D	-	530	-	nm	(0,255,0)
	Blue	λ_D	-	468	-	nm	(0,0,255)
Viewing Angle		φ	-	120	-	Deg.	(255,255,255)
Thermal Resistance (Junction to Solder)	Electrical	$R_{th\ JS\ el}$	-	-	120	K/W	-

Notes:

1. Tolerance of measured luminous intensity: ±8%

2. Luminous flux measured at thermal pad temperature of 25°C

3. Tolerance of dominant wavelength：±1nm

4. Tolerance of chromaticity coordinate ±0.01.

5. Test condition is based on the command digLED_Set_RGB(x,x,x).

Copyright © 2014, Everlight All Rights Reserved. Release Date: Nov.27.2024 Issue DSE-0028615 Ver.9

2. Absolute Maximum Ratings

Parameter	Symbol	Rating	Unit
DC Supply voltage	VCC5	5.5	V
Operating Temperature	T_{opr} (T_s)	-40 ~ 110	°C
Storage Temperature	T_{stg}	-40 ~ 110	°C
ESD Sensitivity	ESD_{HBM}	2	kV
Soldering Temperature	Reflow	260°C for 30 seconds	°C
Junction Temperature	T_J	125	°C

3. Recommended Operating Condition

Parameter	Symbol	Condition	Min.	Typ.	Max.	Unit
Supply Voltage	VCC	—	4.5	5	5.5	V
Serial IO Voltage	V_{SIO1_P} V_{SIO1_N}	—	4.5	5	5.5	V
PRG5 Voltage	V_{PRG5}	—	-	GND	30	mV

*1 Note: power dissipation is limited by package type and the temperature of the operating environment.

4. Interface Characteristics

Parameter	**Description**	**Min.**	**Typ.**	**Max.**	**Units**
f_{SIO1_P},single ended	Single ended data rate SIO1_P	1.4	2	2.6	MHz
f_{SIO1_N},single ended	Single ended clock rate SIO1_N	2.8	4	5.2	MHz
$V_{IH,se}$	Single ended input high voltage	1.20	—	—	V
$V_{IL,se}$	Single ended input low voltage	—	—	1.14	V
$V_{IAmp,diff}$	Differential input amplitude	150	250	325	mV
$V_{OAmp,diff}$	Differential output amplitude	175	250	325	mV

Copyright © 2014, Everlight All Rights Reserved. Release Date: Nov.27.2024 Issue DSE-0028615 Ver.9

5. Supply Current (T_j=25°C)

Parameter	Description	Min.	Typ.	Max.	Units
LED Red	Iavg	0		26.7	mA
LED Green	Iavg	0		13.6	mA
LED Blue	Iavg	0		13.5	mA
Driver	Stand by Current	0.9	1.2	1.5	mA

6. Power on Reset(POR)

Parameter	Min.	Typ.	Max.	Units
VCC	4.0	4.2	4.4	V

7. Undervoltage-lockout

Parameter	Min.	Typ.	Max.	Units
VCC	3.2	3.3	3.4	V

Copyright © 2014, Everlight All Rights Reserved. Release Date: Nov.27.2024 Issue DSE-0028615 Ver.9

8. Functional Block Diagram

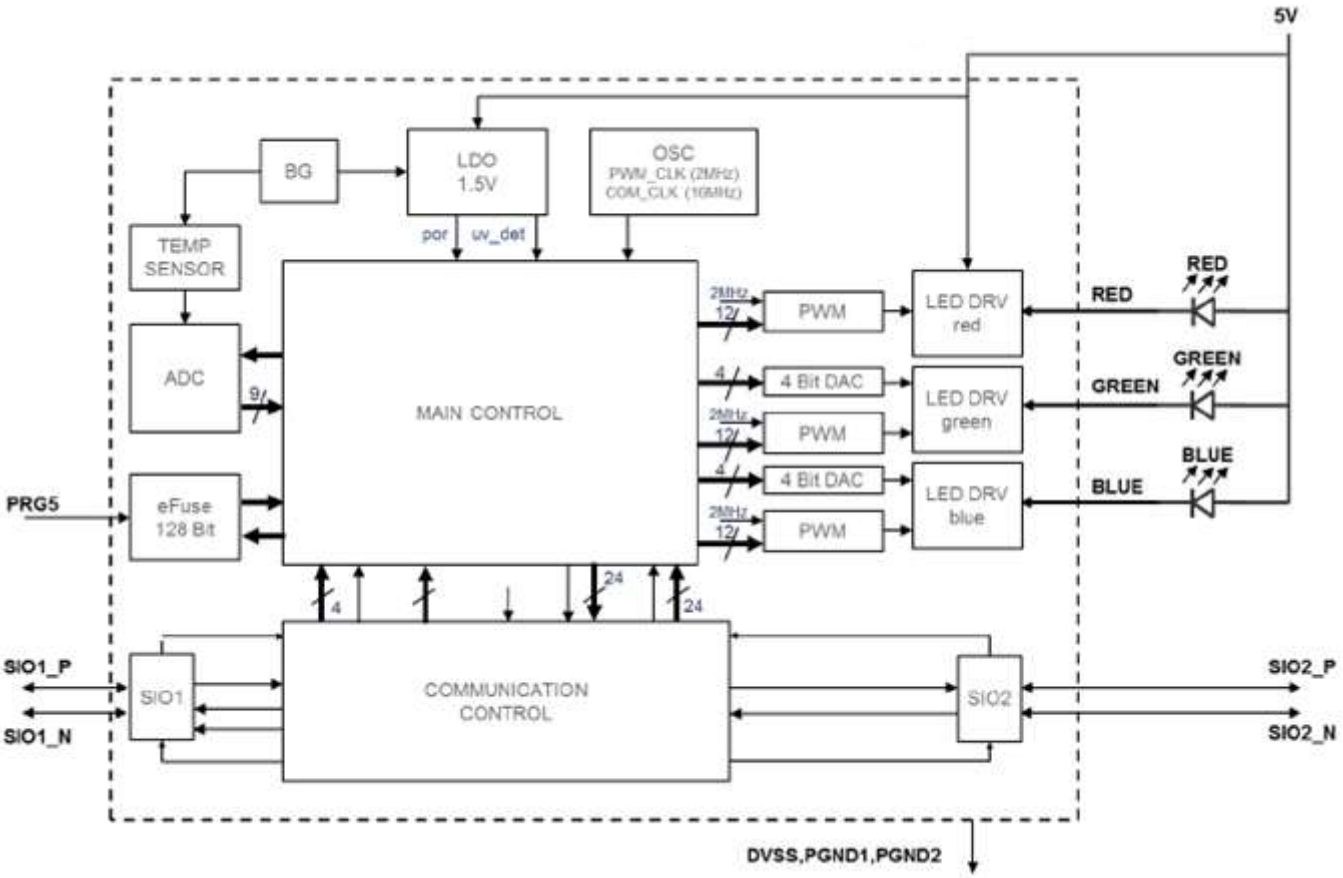

Copyright © 2014, Everlight All Rights Reserved. Release Date: Nov.27.2024 Issue DSE-0028615 Ver.9

9. Typical Application Layout

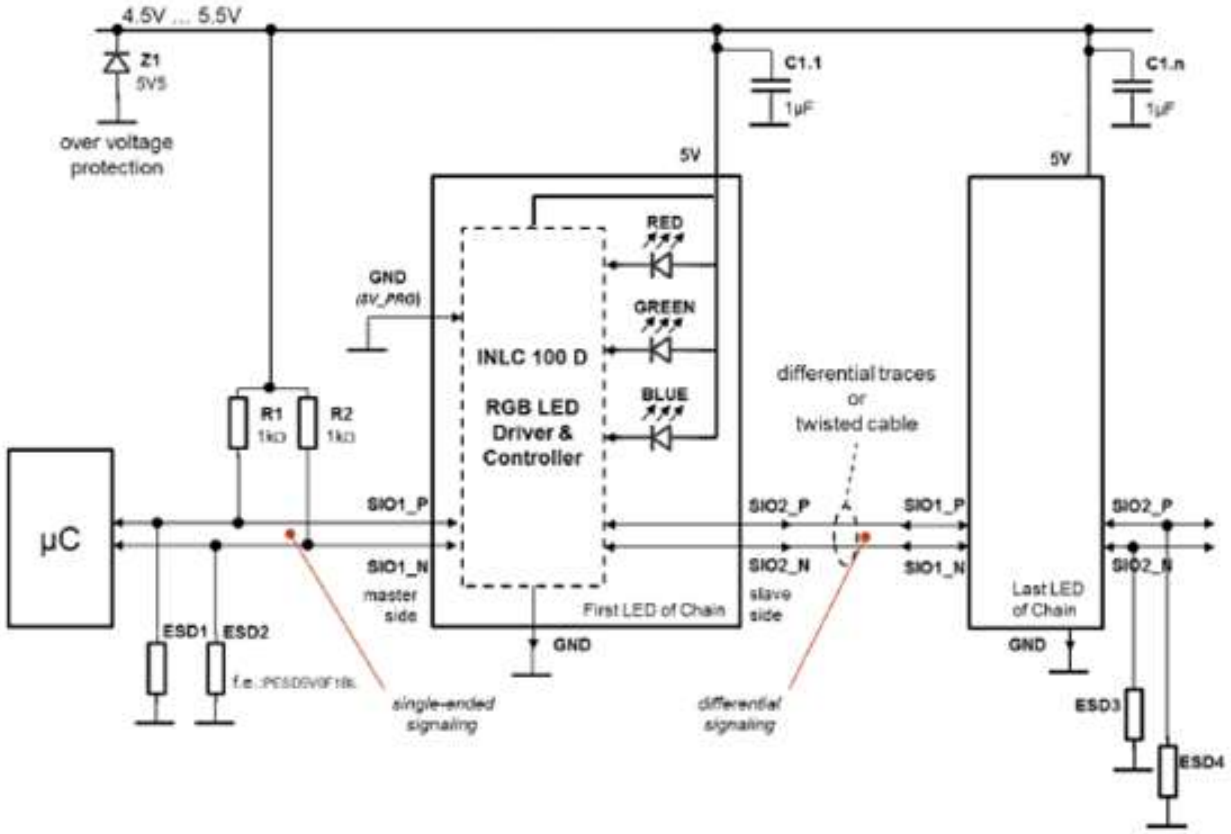

Copyright © 2014, Everlight All Rights Reserved. Release Date: Nov.27.2024 Issue DSE-0028615 Ver.9

10. Pad Description

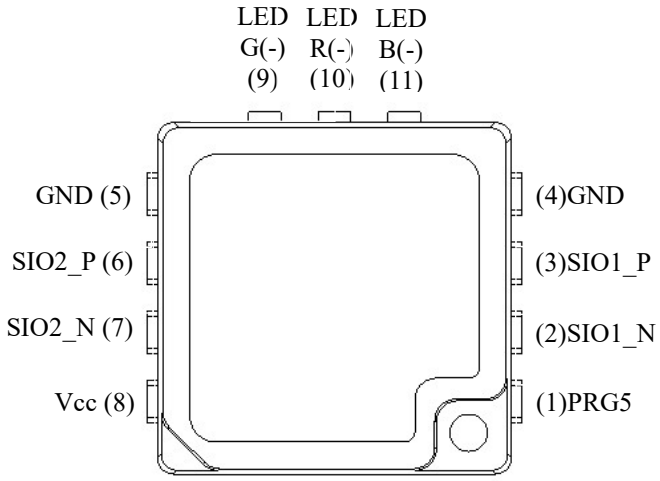

Pin Number	Pin Name	Description
1	PRG5	Program Voltage. Connect to GND for Normal Operation
2	SIO1_N	Serial Communication Interface Master Side, Negative Polarity
3	SIO1_P	Serial Communication Interface Master Side, Positive Polarity
4/5	GND	Ground
6	SIO2_P	Serial Communication Interface Slave Side, Positive Polarity
7	SIO2_N	Serial Communication Interface Slave Side, Negative Polarity
8	V_{CC}	5V Supply Voltage
9	LED G(-)	No electrical connection required for normal operation [1]
10	LED R(-)	No electrical connection required for normal operation[1]
11	LED B(-)	No electrical connection required for normal operation[1]

Notes:

1. For each LED(R/G/B) could be light up independently without IC, the method as below

   Ex : Light up Green color LED without IC

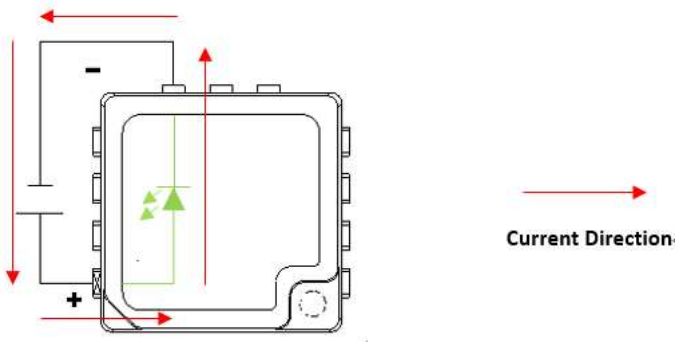

Copyright © 2014, Everlight All Rights Reserved. Release Date: Nov.27.2024 Issue DSE-0028615 Ver.9

Functional Description

Serial Communication

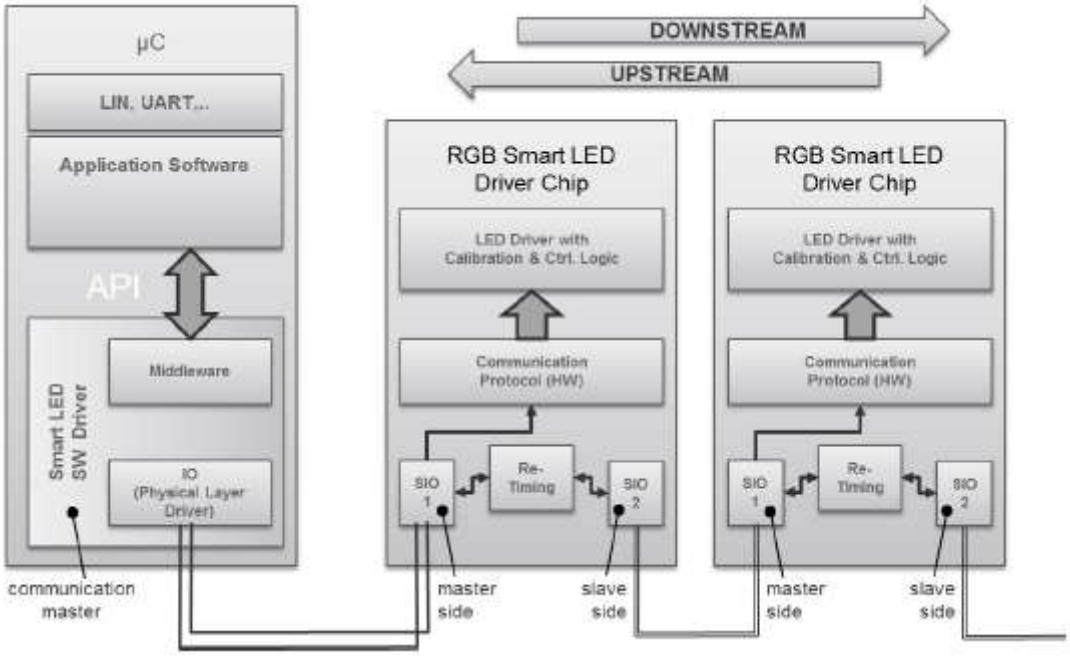

The attachment to the adjacent devices in the chain is made up by two bidirectional differential serial communication lines. The direction towards the controlling microcontroller device is referred to as the “upstream” connection. The opposite direction towards the end of the chain is the “downstream” link. Both links are controlled by the Communication Unit. Incoming command frames from upstream and responses from downstream are passed to the Main Unit which is responsible for command processing and overall device control. Commands always originate from the controlling microcontroller. The microcontroller is referred to as the “host” in this document.

The gross data rate on the serial line is 2 Mbit/s, i.e. each bit has a nominal duration of 500 ns. As the on-die oscillator has a very limited accuracy, the actual bit time may vary significantly. The whole system is designed for a maximum oscillator variance of ±30%. With the nominal oscillator frequency being 16 MHz, the actual frequency range is 11.2-20.8 MHz.

The device directly attached to the host does not use the differential line mode on the upstream side. Instead a single-ended line mode is used. The single-ended mode is intended to allow for an easy attachment to industry standard microcontrollers. Both single-ended lines require an external pull-up at the microcontroller to 5V.

Copyright © 2014, Everlight All Rights Reserved. Release Date: Nov.27.2024 Issue DSE-0028615 Ver.9

Automatic Detection of the Serial Line Mode

During start-up, the devices automatically detect the mode of the upstream and the downstream link. The upstream link may be either single-ended or differential. If a device detects the upstream to be single-ended, it is the first in the chain of LEDs. The downstream link may be either differential or unconnected, i.e. the device is the last in the chain of LEDs. After power-up, an idle of $t_{INIT\ Idle}$ = 150µs is recommended before the initialization. If during the initialization, while receiving the enumeration command, the master SIO_N pin is single ended high (5V), the device is switched into single ended communication mode for this port. The detected mode is stored and used for all following communications until a power cycle or a reset command.

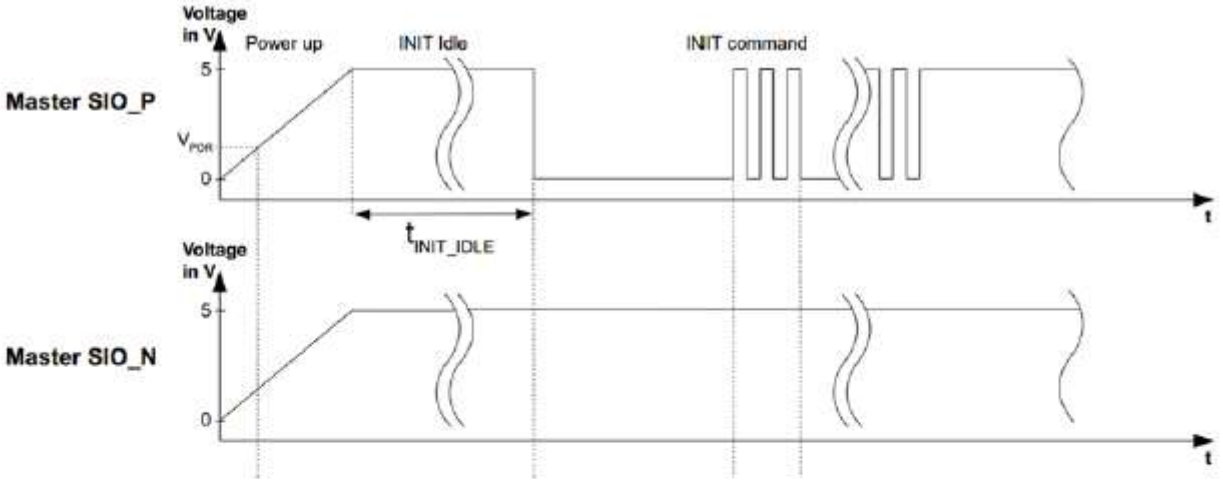

Figure 3 - Single ended startup (first device in chain)

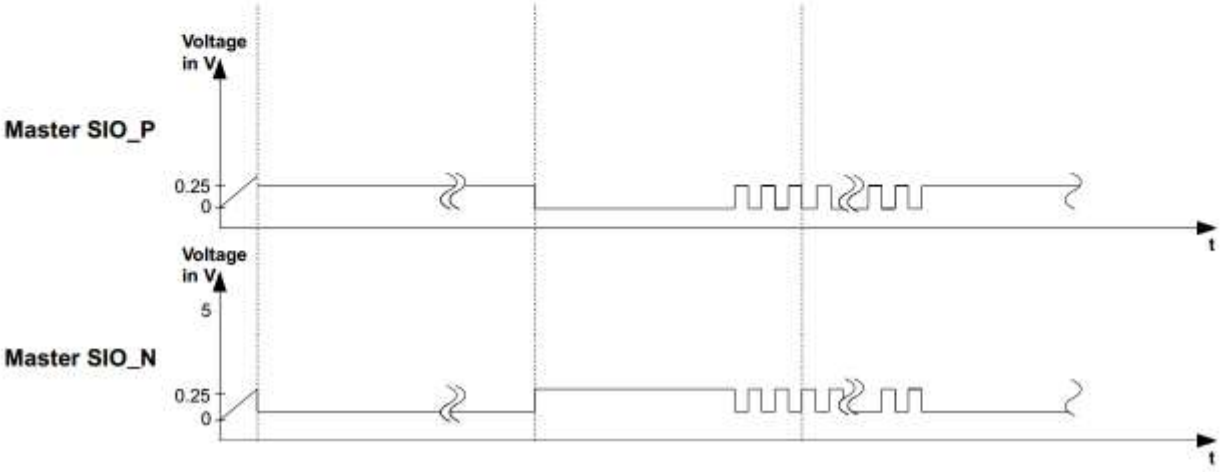

Parameter	Description	Min.	Typ	Max	Units
$t_{INIT\ Idle}$	Init Idle directly after power up	150	-	-	µs

Half-Duplex Communication

The communication operates in a strict master slave manner. I.e. the microcontroller as the master always initiates a communication. Depending on the type of command the LED devices may send a response (read access) or just silently execute the command (write access). There are three basic types of commands which are described in the following.

Copyright © 2014, Everlight All Rights Reserved. Release Date: Nov.27.2024 Issue DSE-0028615 Ver.9

Basic Frame Format

Commands and the response to commands are transmitted with serial frames. A serial frame always consist of a frame_sync section, followed by a frequency_sync section, followed by a run length coded command section and finally terminated with an optional CRC section. The command and the CRC sections differ in length between downstream and upstream frames.

The chosen bit encoding ensures a maximum number of adjacent zeros of 4 and a maximum number of adjacent ones of 5 on the serial line. Some of the bit patterns which cannot occur during regular data transmission are used for special purposes. A pattern of 6 or more 1-bits is considered as the bus-idle condition. The bus is idle, when no communication is currently ongoing. A pattern of 15 0-bits is recognized as the so-called frame synchronization. This is the sequence to begin a new frame. The pattern “10101” is the so-called frequency synchronization pattern. It is used after the frame synchronization to determine the transmitter’s gross data rate.

Downstream communication is defined as data inputs at SIO1 and outputs at SIO2. This is the data flow for write commands. Upstream respectively is defined as data inputs at SIO2 and outputs at SIO1. This is the data flow for the read response.

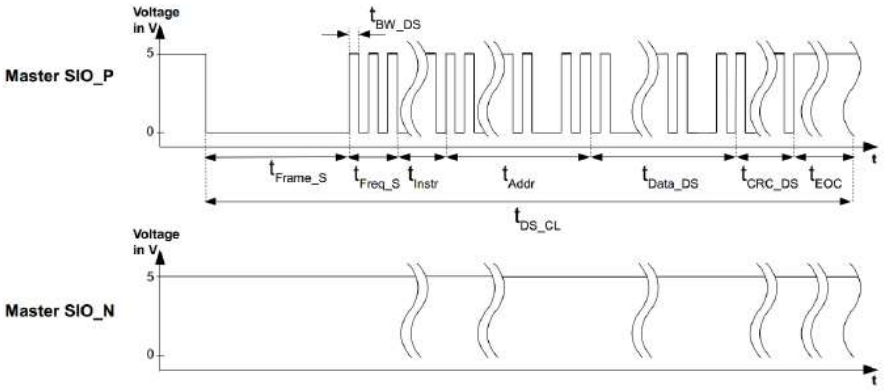

Single ended downstream command frame

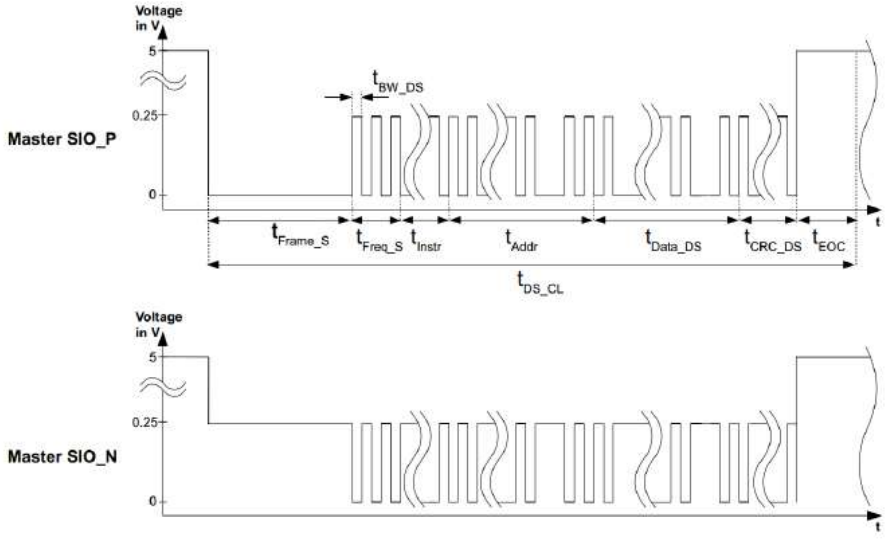

Differential downstream command frame

Copyright © 2014, Everlight All Rights Reserved. Release Date: Nov.27.2024 Issue DSE-0028615 Ver.9

Downstream command frame parameters

Parameter	Description		Min.	Typ.	Max.	Units
t_{BW_DS}	Downstream bit width		384	500	714	ns
t_{DS_CL}	Downstream command length	CRC enabled		86 x t_{BW_DS}		ns
		CRC disabled		76 x t_{BW_DS}		
t_{Frame_S}	Frame sync			15 x t_{BW_DS}		ns
t_{Freq_S}	Frequency sync			5 x t_{BW_DS}		ns
t_{Inst}	Instruction			5 x t_{BW_DS}		ns
t_{Addr}	Address			15 x t_{BW_DS}		ns
t_{Data_DS}	Downstream data			30 x t_{BW_DS}		ns
t_{CRC_DS}	CRC downstream			10 x t_{BW_DS}		ns
t_{EOC}	End of command idle			6 x t_{BW_DS}	-	ns

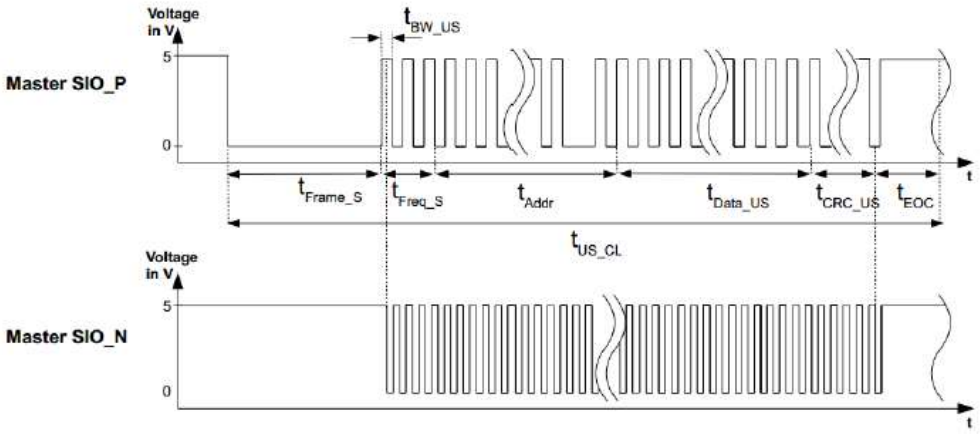

Single ended upstream response frame

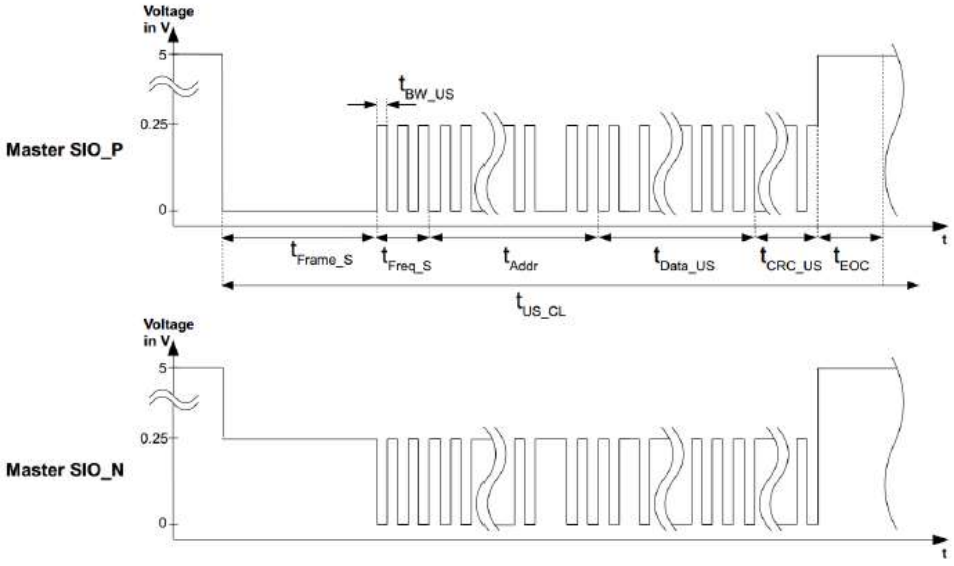

Differential upstream response frame

Copyright © 2014, Everlight All Rights Reserved. Release Date: Nov.27.2024 Issue DSE-0028615 Ver.9

Upstream command frame parameters

Parameter	Description		Min.	Typ.	Max.	Units
t_{BW_US}	Upstream bit width		384	500	714	ns
t_{US_CL}	Upstream command length	CRC enabled		61 x t_{BW_US}		ns
		CRC disabled		56 x t_{BW_US}		
t_{Frame_S}	Frame sync			15 x t_{BW_US}		ns
t_{Freq_S}	Frequency sync			5 x t_{BW_US}		ns
t_{Addr}	Address			15 x t_{BW_US}		ns
t_{Data_US}	Upstream data			15 x t_{BW_US}		ns
t_{CRC_US}	CRC upstream			5 x t_{BW_US}		ns
t_{EOC}	End of command idle			6 x t_{BW_US}		ns

Bit Retransmission

To ensure a correct bit-timing, the forwarded data is regenerated with the clock of the device. The retransmission starts with its own frame-sync when it can be guaranteed that a valid frame-sync timing can be created. A new frequency synchronization is only created after the freq-sync on the reception side has been received (the first four bits). Therefore, the minimum propagation delay t_{pd} introduced by the retransmission is four bit widths t_{bw}.

Name	Description	Min.	Typ.	Max.	Unit
t_{pd}	Propagation delay	2	4	5.2	µs

To guarantee a correct bit-timing the device uses its own clock as reference and will never transmit faster than its own bit-timing defines, but if the received freq-sync was slower, this timing is used for the retransmission.
The retransmission uses a FIFO to compensate for speed differences between reception and transmission.
Due to the variance in the oscillator clocks of different devices, after each transmission a pause of 43% of the nominal transmission time has to be introduced. If the transmission is created by a chip with ±30% oscillator clock variation the time has to be increased to a total of 70% of the transmission duration.

Initialization

The digLED_Init_Strip command initializes a particular ISELED chain by issuing the command on an associated ISELED communication channel.
This command is always the first command to be transmitted after power-up or reset. The command initializes a chain of devices by assigning the address of the device and by en- or disabling the phaseshift, the CRC and temperature compensation functions. The digLED_Init_Strip command is always executed with a CRC checksum. This is true for both, the command and the response frame.
If any command is received by a device before initialization, the command is always considered as illegal and the error status bit for an undefined command is set. This may happen in the chain's first device only, as a non-initialized device does not forward received messages.
If the first device in the chain receives a digLED_Init_Strip command, it takes the received address as its own device address and afterwards transmits another digLED_Init_Strip frame to the next device in the chain. It increments the address before the transmission. As the adjacent devices proceed in the same manner, the devices in the chain get enumerated with ascending addresses. When the final device in the chain recognizes there is no receiving device at its downstream link, it transmits a response frame upstream. The response frame to a digLED_Init_Strip command carries the configuration word read from the OTP. It also transmits the own devices address just initialized.

Copyright © 2014, Everlight All Rights Reserved. Release Date: Nov.27.2024 Issue DSE-0028615 Ver.9

All upstream devices wait for the responses to be received and forward them towards the microcontroller.
If a frame with an address equal to the adjacent device address (own address plus one) is received, the own response to the digLED_Init_Strip command is transmitted thereafter. If the first device has transmitted its response frame, the chain is ready to process regular commands (non-Init frames).
As soon as a device is initialized, it unconditionally forwards incoming correct frames (Frame-Sync, Freq-Sync and the RLC coding as well as the frame length are checked) to the adjacent node in the chain.
Frames received from upstream are forwarded downstream and vice versa. If an error is detected, the forwarding is stopped for this frame.

Name	Description	Equation
t_{INIT}	Initialization duration	n x (t_{DS_CL} + t_{US_CL} + 2 x t_{PD})

Write Access

Most commands of the LED Controller are write-only commands. I.e. the devices receive a command frame and execute the appropriate actions without any further communication. A write access command may be directed to a single device (unicast), to all devices (broadcast), or to a defined group of devices (multicast).
As every command frame is forwarded downstream irrespective of its destination address, all stations always receive all commands. Only its execution depends on the commands destination address. To avoid communication issues, it is recommended to wait 30% of the command length between two consecutive commands.

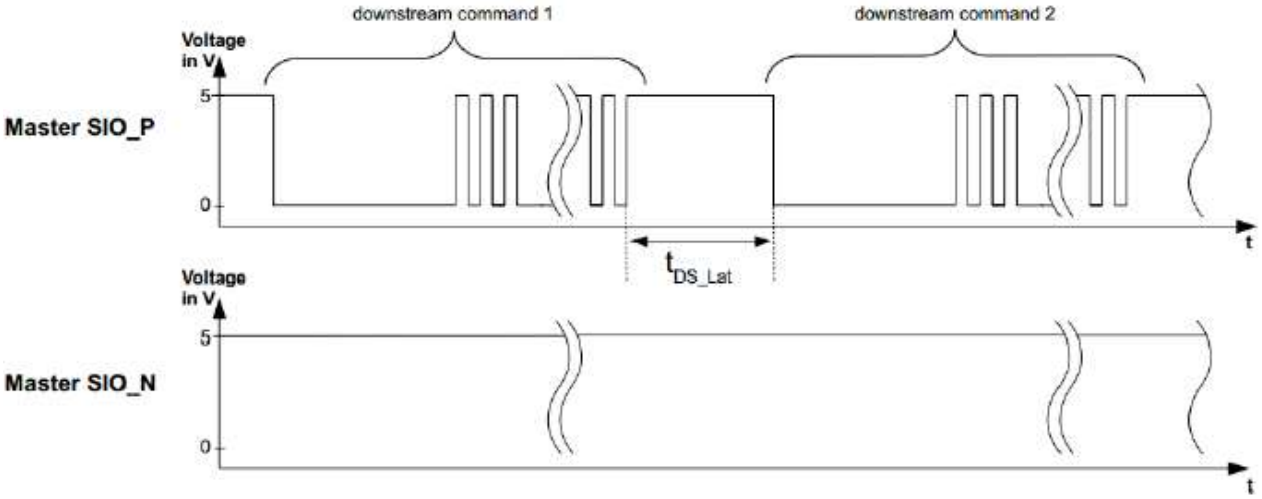

Multiple single ended downstream commands

Recommended latency between downstream commands

Parameter	Description	Min.
t_{DS_Lat}	Latency between two downstream commands	0.3 x t_{DS_CL}

Copyright © 2014, Everlight All Rights Reserved. Release Date: Nov.27.2024 Issue DSE-0028615 Ver.9

Read Access

A read access consists of two phases, the command and the response phase. The command phase uses downstream communication and the response phase uses upstream communication. Commands for read access do not use the command address, i.e. these commands may not be directed to a device based on the device address.

There are two commands for read access, READ and PING. The READ command retrieves a status information from all devices and the PING command is used to check the device chain's integrity. Only the final node in the chain responds to a PING command.

A READ command is first received by all devices via the frame in downstream direction. The last node in the chain then immediately transmits its response frame upstream. The response frame's data field depends on the actual READ command. The response frame's address field is set according to the own device's address. All the nodes upstream forward all received response frames until a frame with the address of their adjacent node is received. Then the respective node transmits its own response frame. This procedure lasts until the chain's first node has transmitted its response frame.

A PING command is similar to a READ command, but only the last device in the chain responds to a PING. Thus the PING command is executed much faster than a regular READ command.

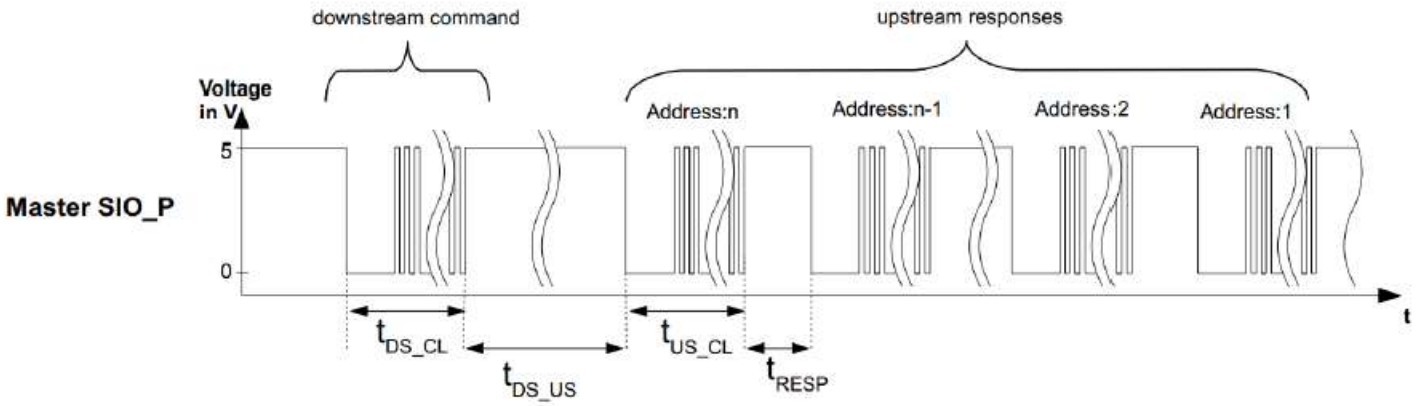

Single ended read command and responses

Down- and upstream delay, delay between responses

Name	Description	Equation
t_{DS_US}	Delay between down- and upstream	$t_{DS_CL} + t_{US_CL} + 2 \times n \times t_{PD}$
t_{RESP}	Delay between responses Oscillator variation of adjacent devices < ±30% Oscillator variation of adjacent devices > ±30%	 $0.43 \times t_{US_CL}$ $0.7 \times t_{US_CL}$

Copyright © 2014, Everlight All Rights Reserved. Release Date: Nov.27.2024 Issue DSE-0028615 Ver.9

Timeouts

The INIT, all the READ, and the PING command initiate upstream data transmission. With the INIT and the read commands all nodes are expected to send a response to the host. The PING requires only the last node in the LED chain to respond. However, in all cases each node needs to await all responses originating from the nodes downstream. Thereafter either the node's own response is transmitted or new commands are accepted. Only the last node in the LED chain may immediately transmit its response.

In case there is an error with the chain downstream, not all expected responses may arrive. Thus each of the commands expecting a response waits for a certain time only and then returns to its previous state without having transmitted the node's response data.

The lengths of the timeouts depend on the respective command. They are calculated to account for the worst case oscillator frequency tolerance. I.e. the waiting node has a high speed clock and all the nodes waited for have a low speed clock. The hardware implementation uses an internally divided clock for the timeout counter:

$$f_{[timeout]} = f_{[osc]} / 2^{14}$$

With the nominal clock frequency of 16MHz the counter's resolution results to 1.024ms.

Command	Max. counter value	Min. timeout	Nom. timeout	Max. timeout	Units
digLED_Init_Strip	992	780.6	1015.3	1451.2	ms
digLED_Read_*	427	335.6	436.7	624.6	ms
digLED_Ping	62	48.0	63.0	90.7	ms

PWM Units

Basic Mode of Operation

The LED controller device incorporates three independent PWM channels, one for each LED.

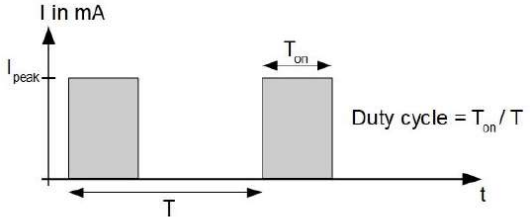

PWM Signal

The resolution is 12 bit. The supported duty cycles are 1/4095 to 4095/4095. The nominal PWM output frequency is $16MHz/2^{15}$ = 488.3Hz. The frequency is reduced to the half or the quarter of this frequency with low duty cycles. This ensures a minimum on-time of 2µs for the LEDs. The minimum output frequency is 122Hz. The output frequency is not derived from the actual PWM duty cycle but from the RGB value received from the host. As the DIM command also has impact to the LED intensity, it is accounted for as well. The actual relationship is given in the following table.

Copyright © 2014, Everlight All Rights Reserved. Release Date: Nov.27.2024 Issue DSE-0028615 Ver.9

DIM Parameter	RGB Parameter	PWM Frequency in Hz
0	8…255	488
	4…7	244
	0…3	122
1	16…255	488
	8…15	244
	0…7	122
2	32…255	488
	16…31	244
	0…15	122
3	64…255	488
	32…63	244
	0…31	122

The output frequency is determined independently for each of the PWM channels.

Update

When a new PWM duty cycle has to be applied, this is always done at the end of a PWM cycle. I.e. the PWM always completes an output cycle using the previously active duty cycle and starts the next output cycle using the updated duty cycle.

Phase Shift

In order to spread the current consumption of the LEDs over time, a phase shift can be set between the three PWM channels. This optional function can be enabled/disabled during device initialization.
If the phase shift is deactivated, the red channel controls all three outputs and thus provides the temperature compensation function for all three channels.
If the phase shift is enabled, it retains even if the output frequency of the channels is different. If a channel is operating at a lower frequency, it may be considered to leave out one or three full PWM cycles. When leaving power save mode, the channels are restarted appropriately to again obtain the correct phase shift. The fixed phase shift is defined in the following table. Please note the absolute phase shift times are nominal values. I.e. they are subject to vary with the internal oscillator's frequency.

PWM Channel	Rel. Phase Shift	Units	Abs. Phase Shift
Green	0	%	0
Red	25	%	0.25 / PWM Frequency
Blue	75	%	0.75 / PWM Frequency

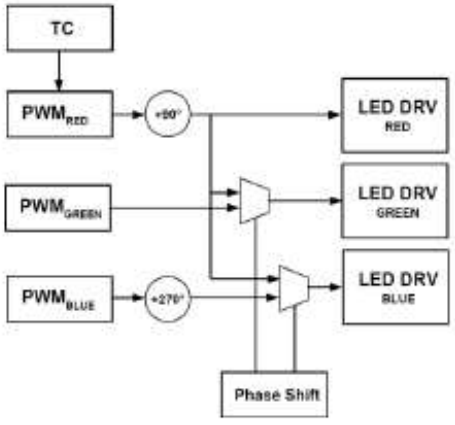

Copyright © 2014, Everlight All Rights Reserved. Release Date: Nov.27.2024 Issue DSE-0028615 Ver.9

Power Save Mode

When all LED channels are set to an intensity of 0, the device enters a power save mode for the current sources driving the LEDs I.e. the digLED_Set_RGB command must be issued with an RGB value of 0x000000 to enter the power save mode.

Recovering from this mode does not require any particular measures. I.e. the host just needs to issue a digLED_Set_RGB command with the data field different from 0x000000 and the current sources are restarted again. There is a delay of approx. 1µs before the restart of the green PWM channel (no phase shift applies to the green channel).

This is due to an internal ramp-up required by the analog circuitry. The same procedure is applied after device power-up or a hardware reset, as the initial RGB value is 0x000000. I.e. the LEDs are all turned off after power-up or a hardware reset.

Copyright © 2014, Everlight All Rights Reserved. Release Date: Nov.27.2024 Issue DSE-0028615 Ver.9

11. Characteristics Graph

Wavelength Characteristics Relative Spectral Distribution

I rel = f(λ); Tj = 25°C; Color set point (255,255,255)

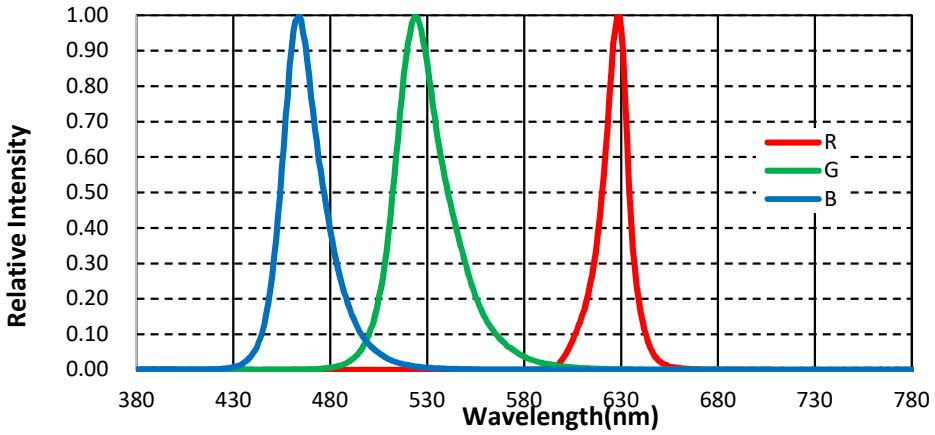

Typical Diagram Characteristics of Radiation

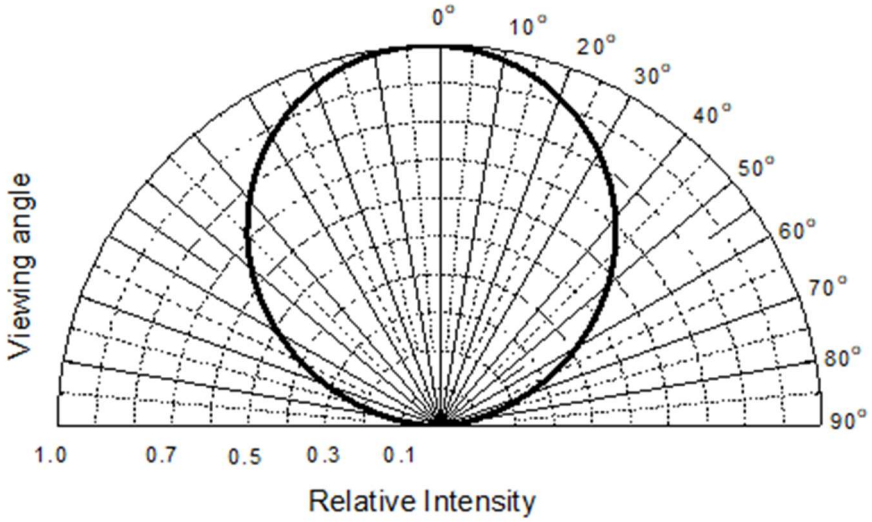

Notes:

1. View angle tolerance is ± 5°

Copyright © 2014, Everlight All Rights Reserved. Release Date: Nov.27.2024 Issue DSE-0028615 Ver.9

Maximum Color set point Vs Temperature

Color set point = f(T) Color set point (255,255,255)

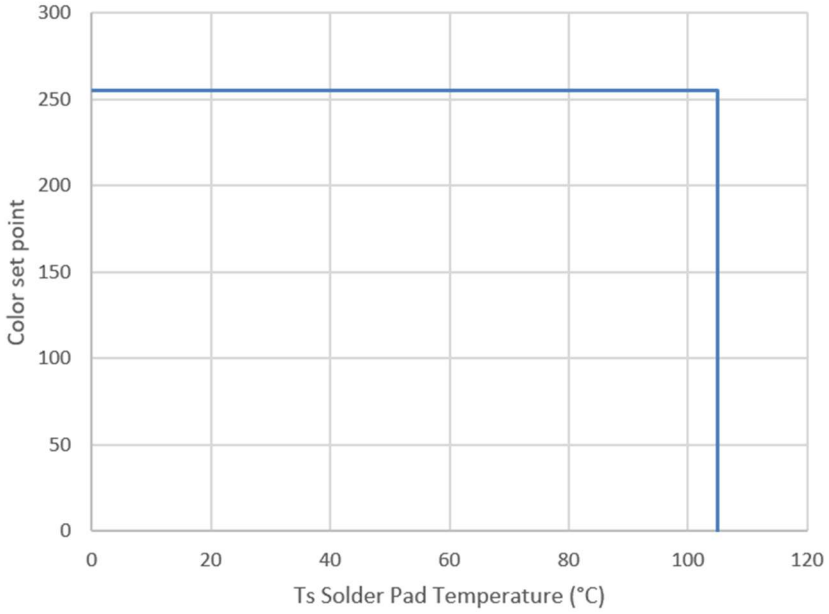

Relative Luminous intensity Maximum Vs Color set point

Iv = f(Color set point) Tj=25 ºC DIM=0

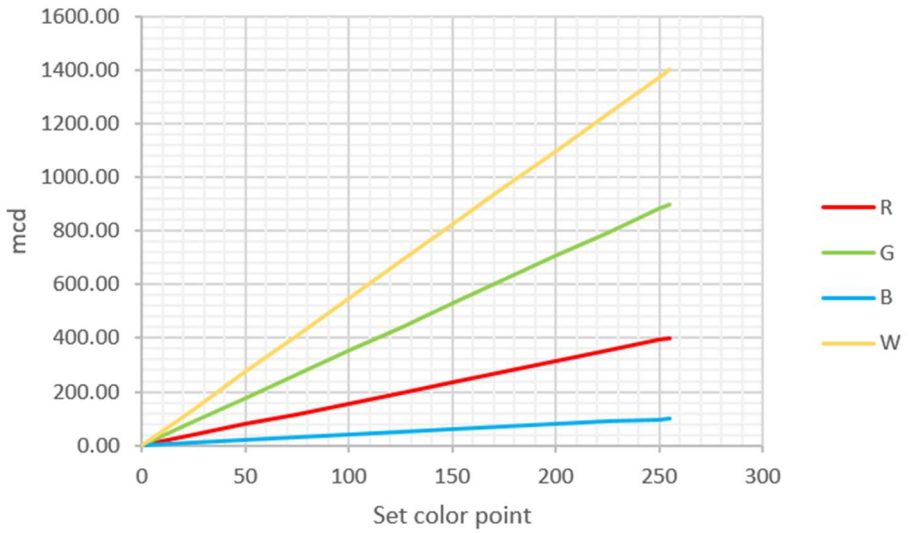

Copyright © 2014, Everlight All Rights Reserved. Release Date: Nov.27.2024 Issue DSE-0028615 Ver.9

Relative Luminous intensity Vs Junction Temperature

Iv / Iv (25 ºC) = f(Tj),Color set point(255,255,255)

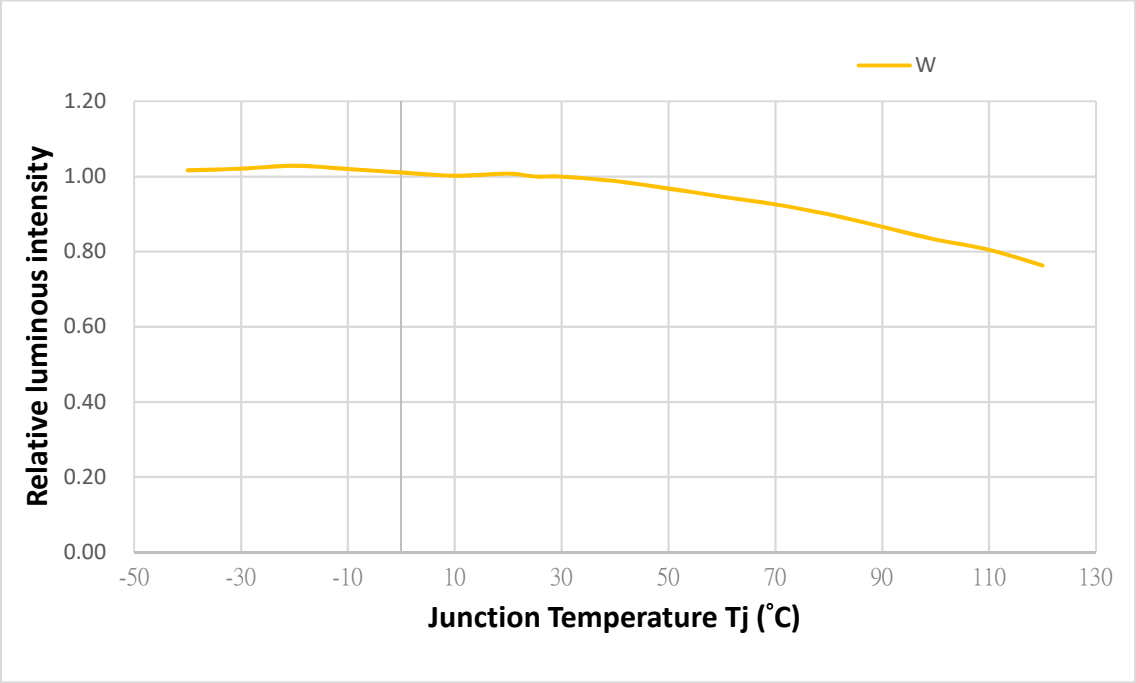

Relative Luminous intensity Vs Junction Temperature

Iv / Iv (25 ºC) = f(Tj),Color set point(255,0,0)

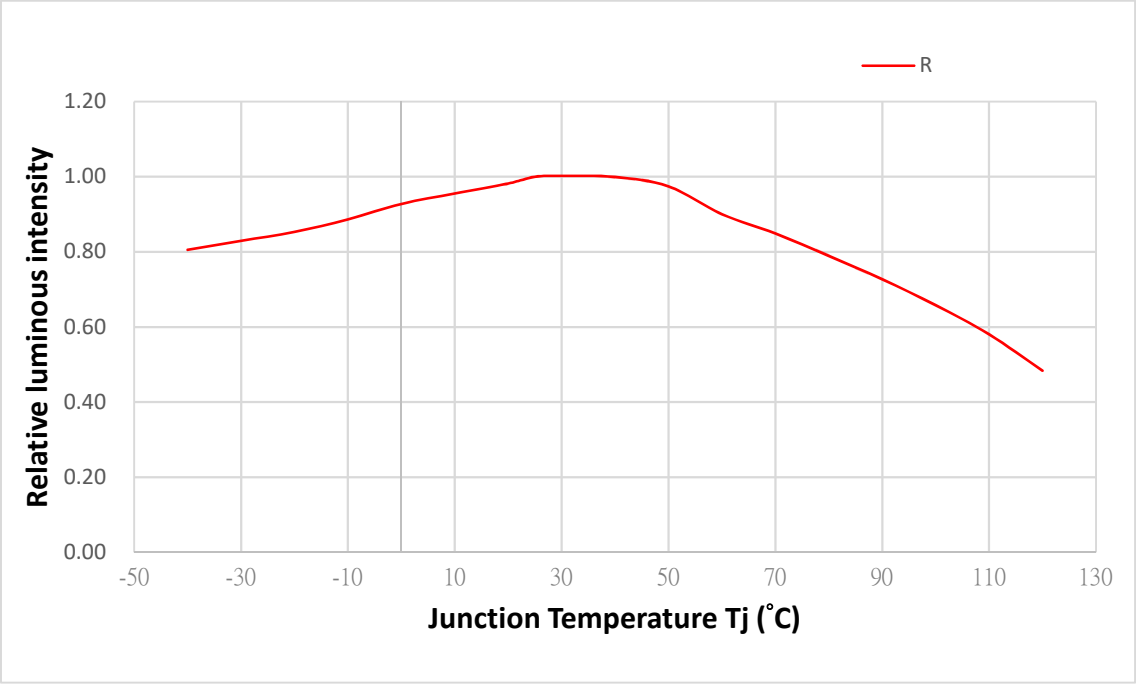

Copyright © 2014, Everlight All Rights Reserved. Release Date: Nov.27.2024 Issue DSE-0028615 Ver.9

Relative Luminous intensity Vs Junction Temperature

Iv / Iv (25 ºC) = f(Tj),Color set point(0,255,0)

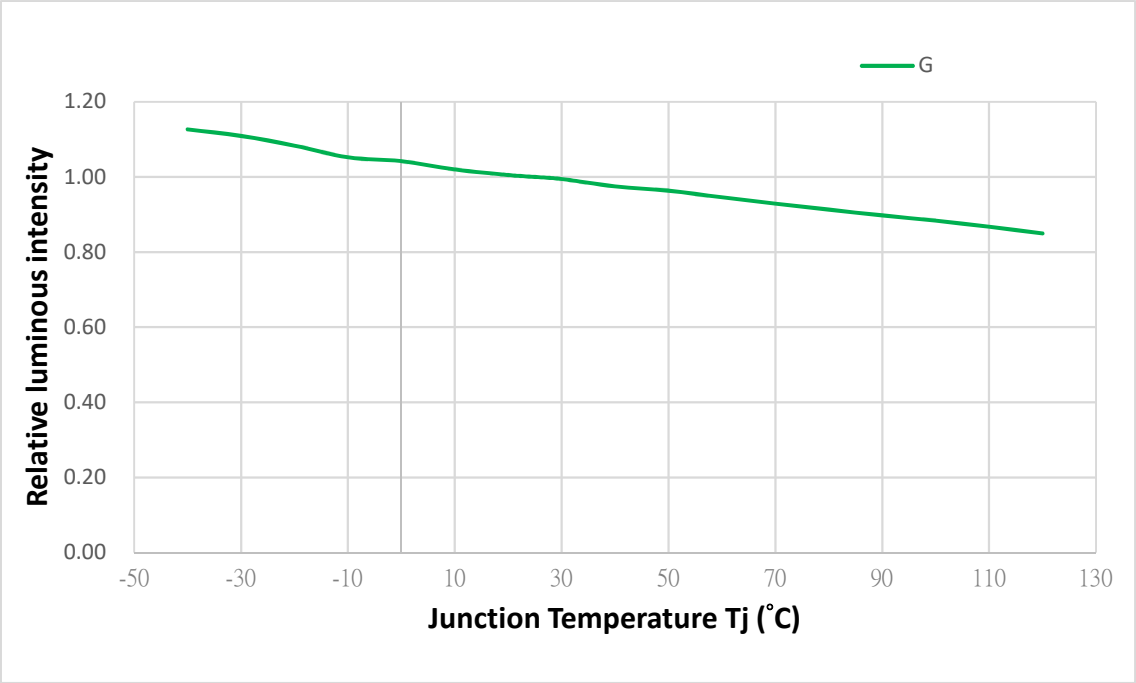

Relative Luminous intensity Vs Junction Temperature

Iv / Iv (25 ºC) = f(Tj),Color set point(0,0,255)

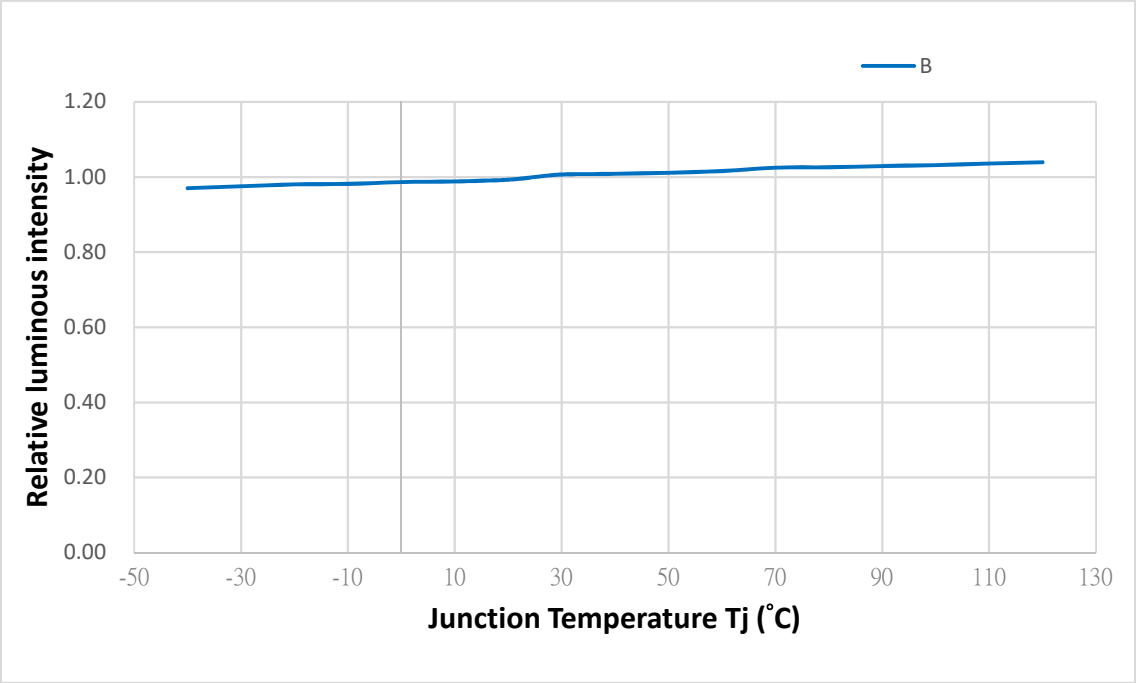

Copyright © 2014, Everlight All Rights Reserved. Release Date: Nov.27.2024 Issue DSE-0028615 Ver.9

Chromaticity Coordinate Shift Vs Junction \Temperature

△Cx,△Cy, (25 ºC) = f(Tj),Color set point(255,255,255)

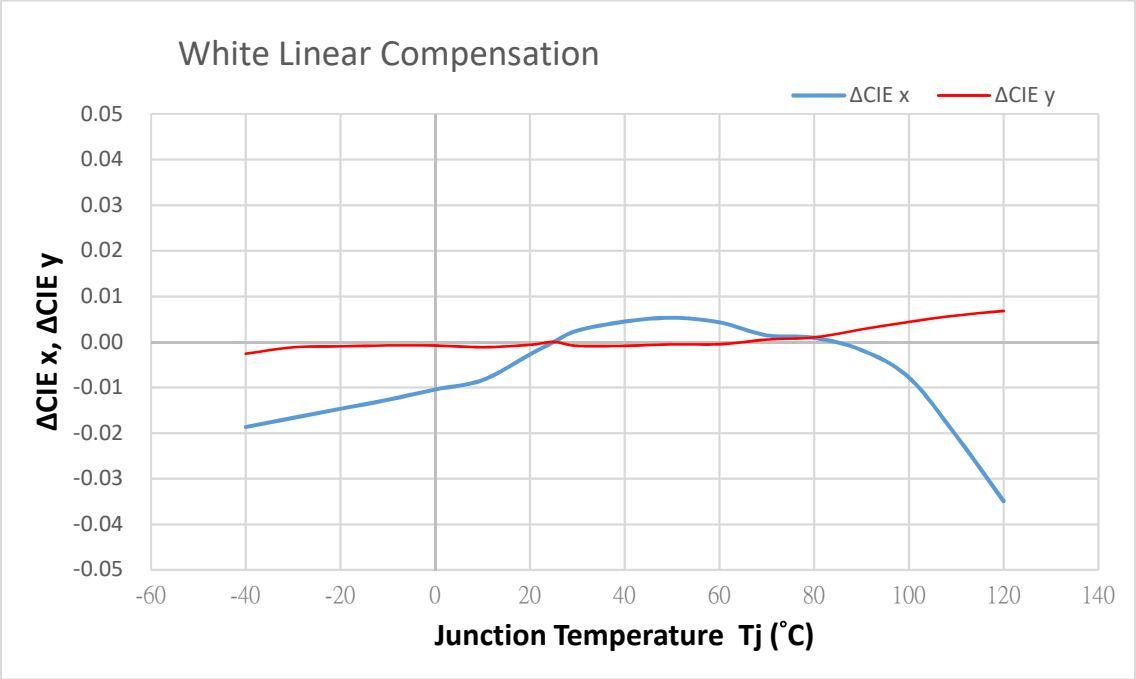

Chromaticity Coordinate Shift Vs Junction Temperature

△Cx,△Cy, (25 ºC) = f(Tj), Color set point(255,0,0)

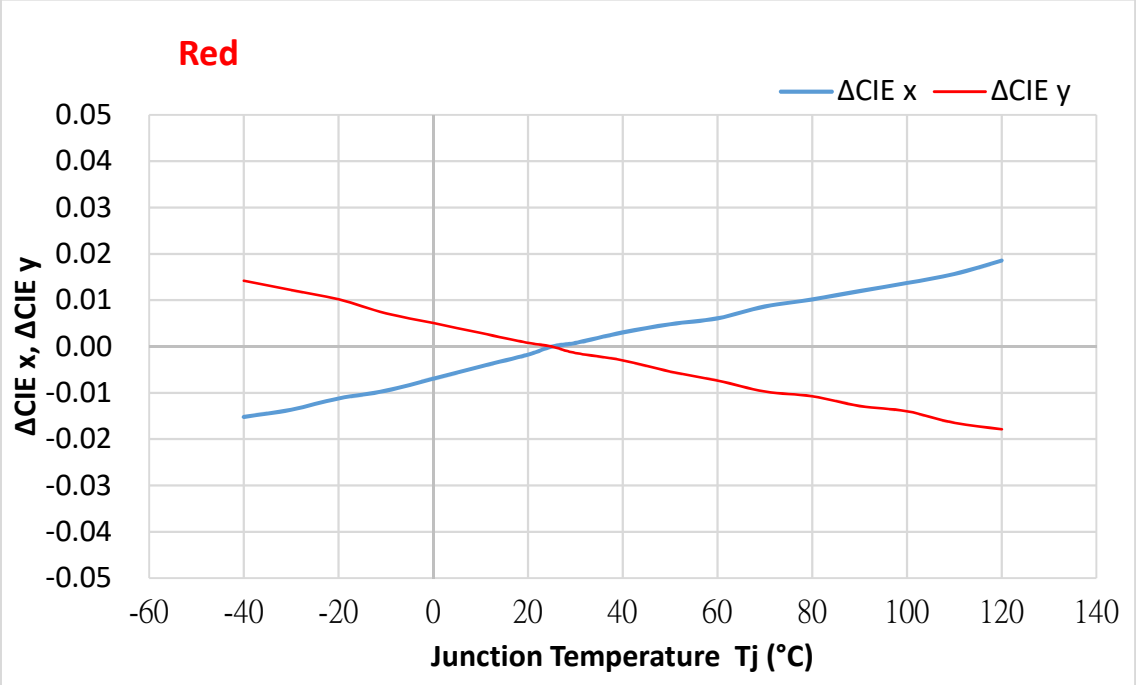

Copyright © 2014, Everlight All Rights Reserved. Release Date: Nov.27.2024 Issue DSE-0028615 Ver.9

Chromaticity Coordinate Shift Vs Junction Temperature

△Cx,△Cy, (25 ºC) = f(Tj),Color set point(0,255,0)

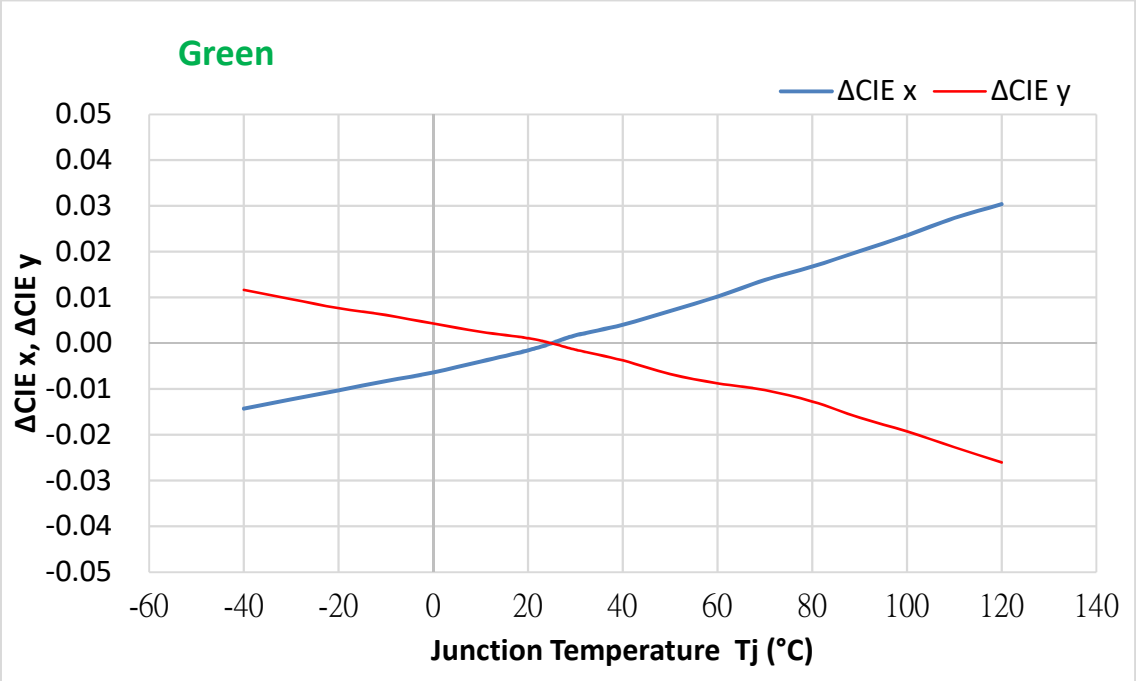

Chromaticity Coordinate Shift Vs Junction Temperature

△Cx,△Cy, (25 ºC) = f(Tj),Color set point(0,0,255)

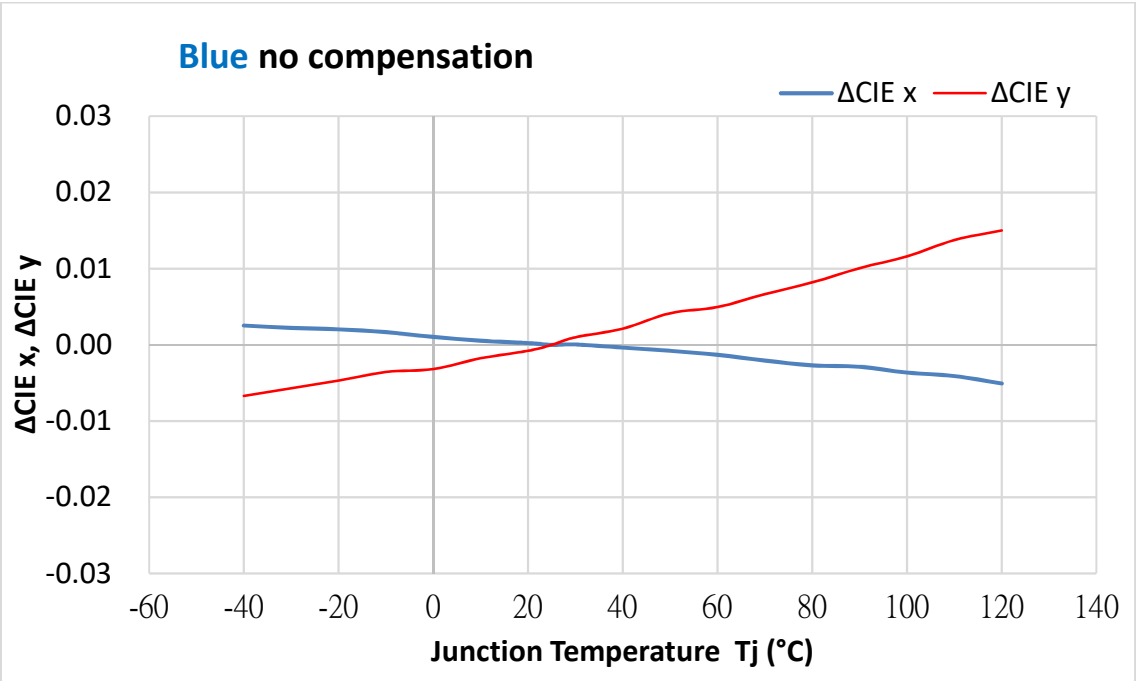

Copyright © 2014, Everlight All Rights Reserved. Release Date: Nov.27.2024 Issue DSE-0028615 Ver.9

12. Binning Information

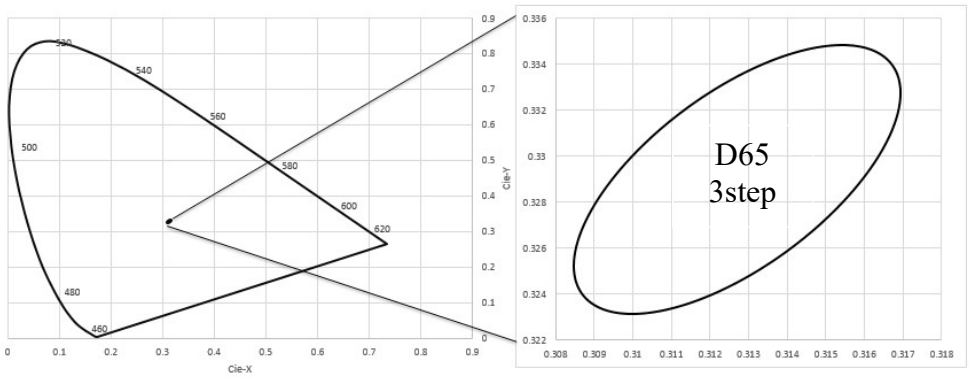

Rank	Description	CIE-x	CIE-y	a	b	Angle
D65	Macadams 3steps	0.3127	0.3290	0.00669	0.00285	58.57

13. Part Number

EL3534-RGBISE0141L-8H-AM

Part number is designated with below details.

1. EL3534 = Product family name.
2. RGBISE = RGB LED were controlled by ISELED IC
3. 0 = CRI (0=N/A; >70=7 ; >80=8 ; >90=9)
4. 14 = Internal Code
5. 1L = Internal Code
6. 8H = Internal Code
7. AM = Automotive Application

Copyright © 2014, Everlight All Rights Reserved. Release Date: Nov.27.2024 Issue DSE-0028615 Ver.9

14. Mechanical Dimension

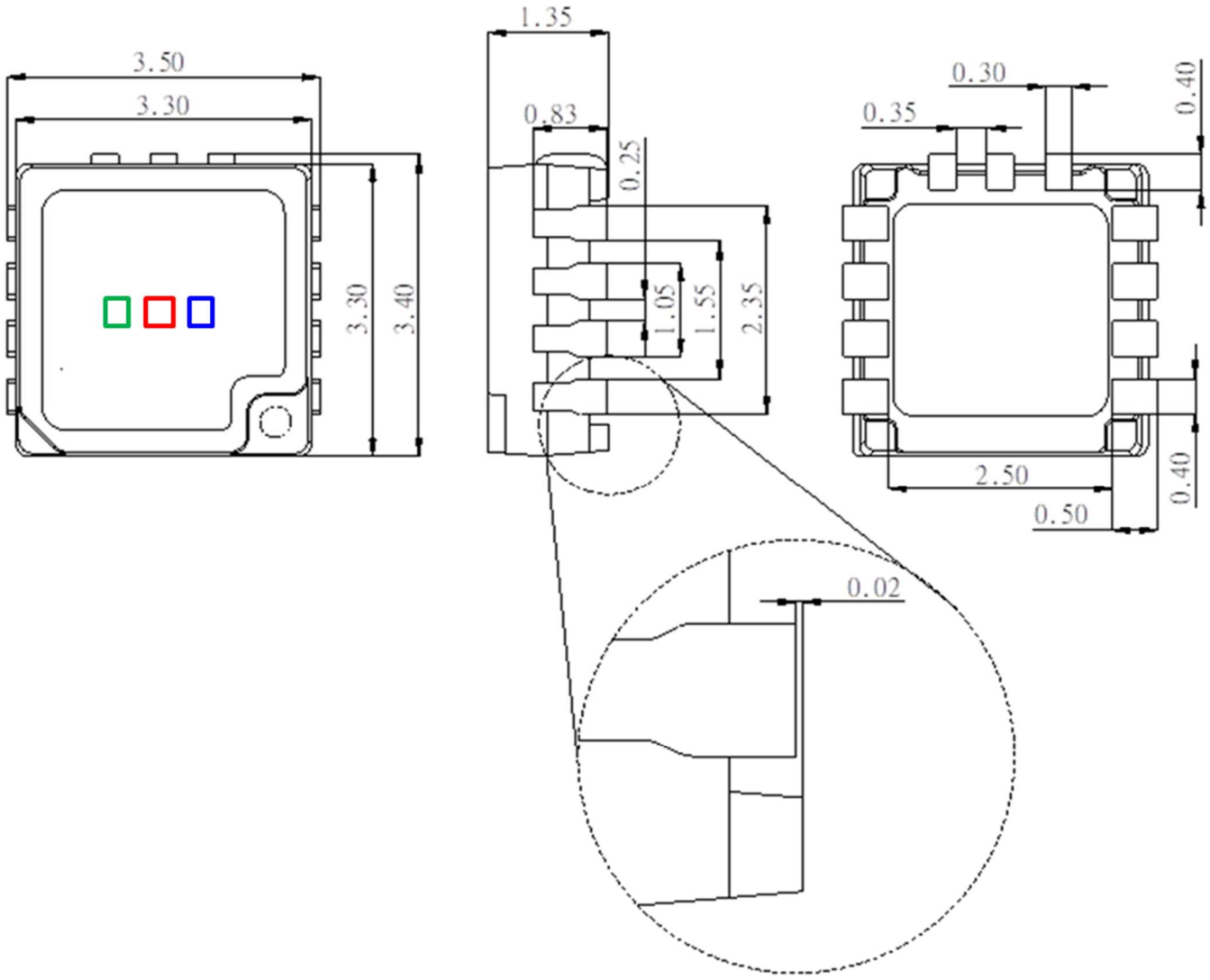

Notes:

1. Dimensions are in millimeters.
2. Tolerances unless mentioned are ± 0.1mm

15. Recommended Soldering Pad

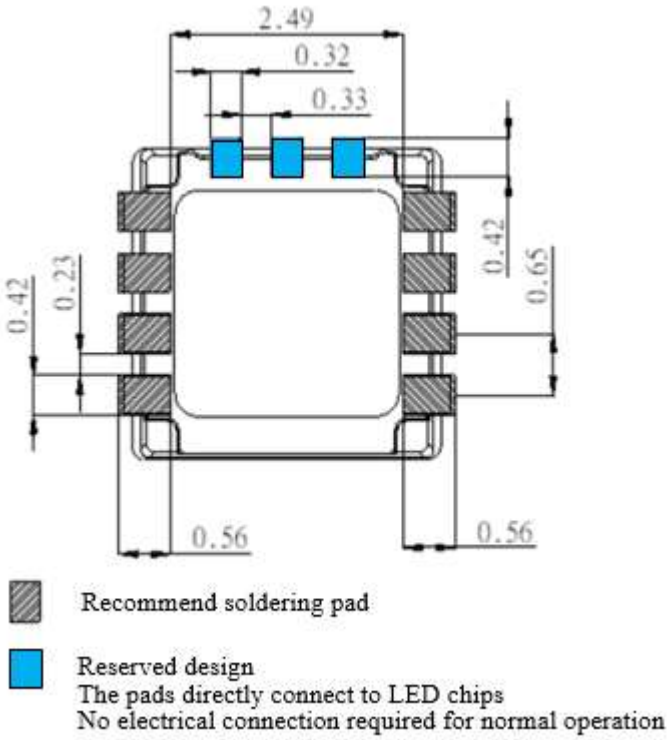

Notes:

1. Dimensions are in millimeters.
2. Tolerances unless mentioned are ± 0.1mm.
3. Suggested pad dimension is just for reference only, please modify the pad dimension based on individual need

Copyright © 2014, Everlight All Rights Reserved. Release Date: Nov.27.2024 Issue DSE-0028615 Ver.9

16. Reflow Soldering Profile

Soldering Condition (Reference: IPC/JEDEC J-STD-020D)

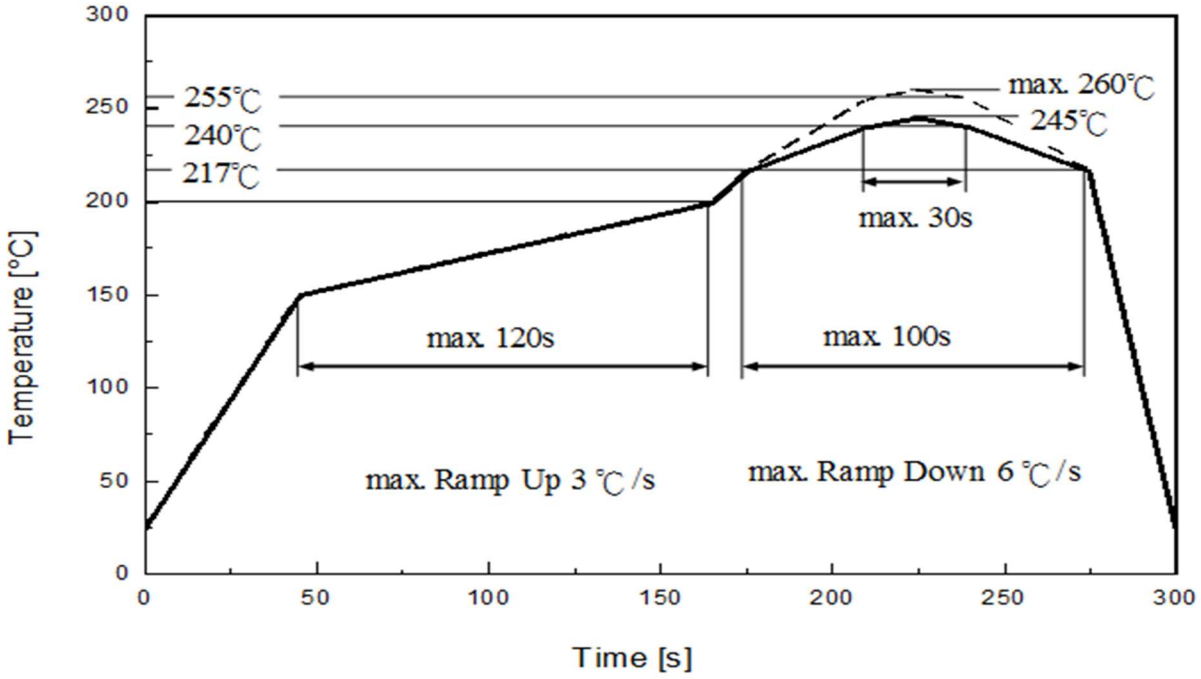

Profile Feature	Pb-Free Assembly	Unit Einheit
	Recommendation	
Ramp-up rate to preheat 25 °C to 150 °C	3	°C /sec
Time of soaking zone 150 °C to 200 °C	120	sec
Ramp-up rate to peak	3	°C /sec
Liquidus temperature	217	°C
Time above liquidus temperature	100	sec
Peak temperature (max.)	260	°C
Time within 5°C of the specified peak temperature	30	sec
Ramp-down Rate (max.)	6	°C /sec

Note: Reflow soldering should not be down more than three times

Copyright © 2014, Everlight All Rights Reserved. Release Date: Nov.27.2024 Issue DSE-0028615 Ver.9

17. Packaging Information

- **Product Labelling**



CPN：Customer's Product Number

P/N：Everlight Part Number

QTY：Packing Quantity

CAT：Luminous Flux (Brightness) Bin

HUE：Color Bin

REF：Forward Voltage Bin

LOT No：Lot Number

- **Packing: Loaded Quantity 800 pcs Per Reel**
- **Reel Dimensions**

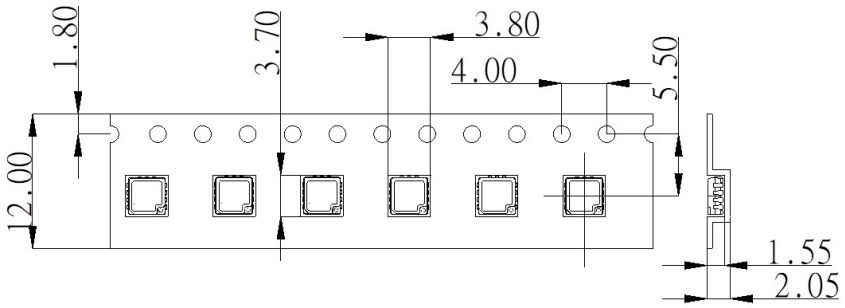

Notes: Dimensions are in millimeters.

- **Moisture Resistant Packing Process**

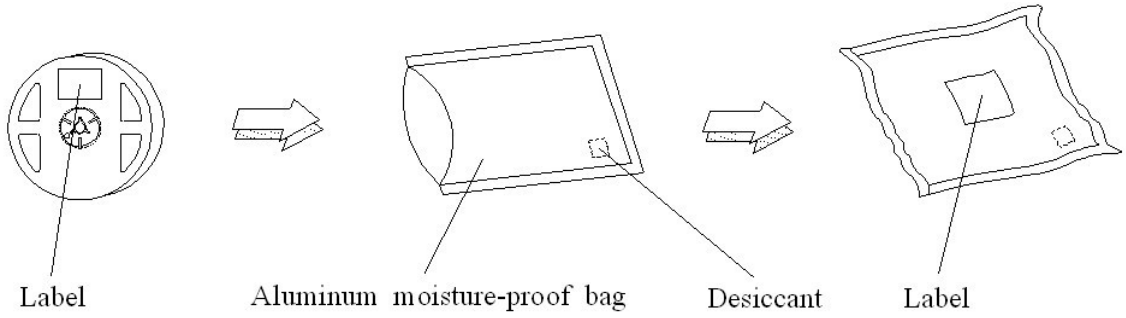

Notes: Dimensions are in millimeters

Copyright © 2014, Everlight All Rights Reserved. Release Date: Nov.27.2024 Issue DSE-0028615 Ver.9

18. Precaution for Use

1. Over-current-proof
   Customer must apply resistors for protection; otherwise slight voltage shift will cause big current change (burn out will happen).

2. Assemblies
   Do not stack assemblies containing LEDs to prevent damage to the optical surface of LEDs. Forces applied to the optical surface may result in the surface being damaged.

3. Soldering Condition
   3.1 When soldering, do not put stress on the LEDs during heating.
   3.2 After soldering, do not warp the circuit board.

4. Soldering Iron
   Each terminal is to go to the tip of soldering iron temperature less than 350°C for 3 seconds within once in less than the soldering iron capacity 25W. Leave two seconds and more intervals, and do soldering of each terminal. Be careful because the damage of the product is often started at the time of the hand solder.

5. Repairing
   Repair should not be done after the LEDs have been soldered. When repairing is unavoidable, a double-head soldering iron should be used (as below figure). It should be confirmed beforehand whether the characteristics of the LEDs will or will not be damaged by repairing.

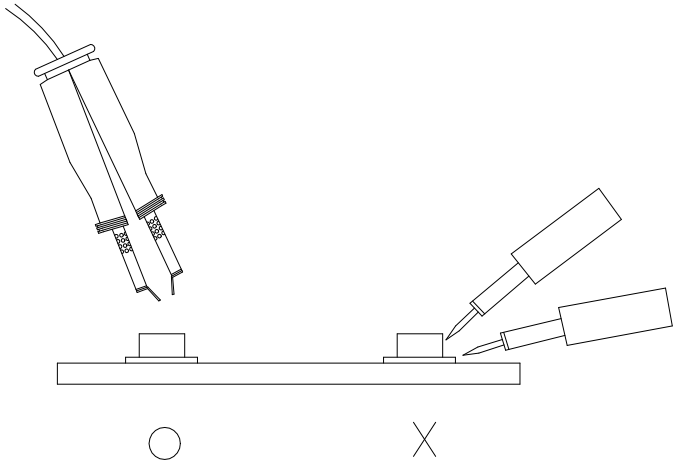

Copyright © 2014, Everlight All Rights Reserved. Release Date: Nov.27.2024 Issue DSE-0028615 Ver.9

19. Directions for Use

1. When handling the product, do not touch the LED with bare hands, since it may contaminate the emitting surface and may affect the optical characteristics, Excessive force on the LED may result in the deformation and/or wire breakage, leading to no light emission

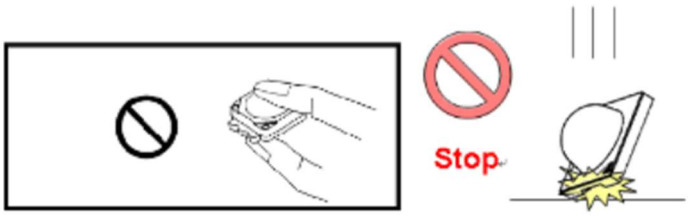

2. When the encapsulate contains silicone resin, the emitting surface is relatively soft; it can be damaged, chipped, and detached form the package due to excessive force and the LED package can be deformed. What is worse, the bonding wire can break up, resulting in degradation of the reliability performance. Customers should take care not to apply stress to the emitting surface.

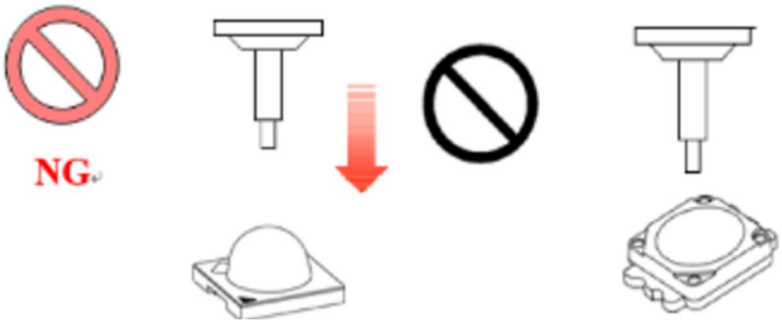

3. When using tweezers, prevent excessive stress form being applied to the LEDs; otherwise, the resin surfaces might be damaged, chipped, detached from the packages and the LED packages might be deformed. What is worse, the bonding wires might break up, resulting in no light emission. If necessary pick up by the package so as not to touch the encapsulating resin surface.

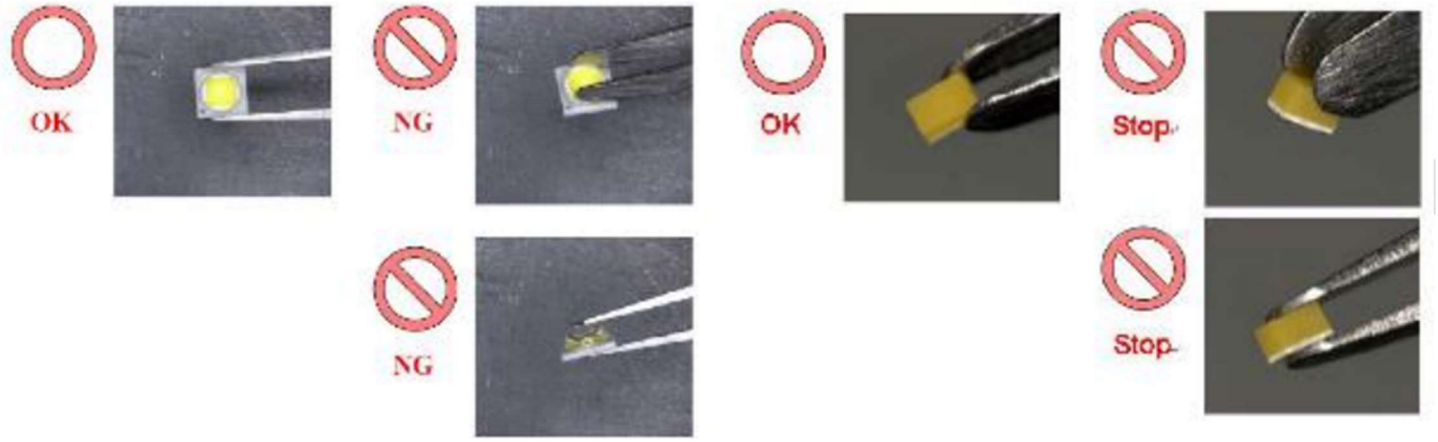

Copyright © 2014, Everlight All Rights Reserved. Release Date: Nov.27.2024 Issue DSE-0028615 Ver.9

4. When you use an automatic assembly machine, select the pick-and-place nozzle not to damage the encapsulating resin.
   If a pick-and-place nozzle has a smaller diameter then the LED`s emitting surface, it can damage the emitting surface when collecting the LED, resulting in its emission failure. The suitable nozzle should be installed into the assembly machine.
   The LED`s placing location can vary, when the rotary head mounting machine is used. Customers should evaluate the mounting performance in advance

Copyright © 2014, Everlight All Rights Reserved. Release Date: Nov.27.2024 Issue DSE-0028615 Ver.9

20. Sulfur Test Criteria

Products	Failure Criteria
Exterior Lighting products	Luminous Flux +/-20%, forward voltage +/-10%, color coordinates x,y +/-0.01, color wavelength +/- 2 nm Visual defect issue following Everlight's inspection criteria
Interior lighting products	Luminous Flux +/-30% or +/-50% for some application, forward voltage +/-10%, color coordinates x,y +/-0.02, color wavelength +/- 2 nm Visual defect issue following Everlight's inspection criteria

H2S test	Grade A0	Grade A1	Grade B0	Grade B1
Class A	Pass ΔIV, ΔColor, ΔVF criteria No Corrosion	Pass ΔIV, ΔColor, ΔVF criteria Corrosion without the impact on reliability and lifetime		
Class B			Pass ΔIV, ΔColor, ΔVF criteria No Corrosion	Pass ΔIV, ΔColor, ΔVF criteria Corrosion without the impact on reliability and lifetime

Class for H2S Test & FMG	Description	
	H2S	FMG
Class A	15 ppm with duration 336 h at 40 °C and 90% RH	Duration 500 h at 25 °C and 75% RH. H2S concentration: 10ppb SO2 concentration: 200ppb NO2 concentration: 200ppb Cl2 concentration: 10ppb
Class B	10 ppm with duration 500 h at 25 °C and 75% RH	

Grade for H2S Test	Description
0	No Corrosion
1	Corrosion without the impact on reliability and lifetime

Copyright © 2014, Everlight All Rights Reserved. Release Date: Nov.27.2024 Issue DSE-0028615 Ver.9

Revision History

Current Version: 2024/11/27

Issue No: DSE-0028615

Version: 9

Created by: You Chen

Revise by: You Chen, Leo Chou.

Rev.	Subjects (major change in previous version)	Modified date
1	Preliminary data sheet	2022/01/19
2	Removed Typical Luminous Intensity in Features: Red 380mcd, Green 900mcd, Blue 110mcd. Modify Sulfur robustness Class A1 in Features to Class A0 Increase Tolerance of chromaticity coordinate ±0.01 Removed Output Current (OUT(R)) from the Absolute Maximum Ratings table Output Current (OUT(G)) Output Current (OUT(B)) Modify the MAX value of LED Red LED Green LED Blue in the Supply Current table and remove Condition.	2022/11/23
3	修改 Typical operating current and supply current	2023/01/11
4	Updated Direction for use, Modified Soldering Pad Drawing	2023/03/31
5	Updated Mechanical Dimension graph with light up position	2023/07/11
6	Changed from provisional approval to official release	2023/08/14
7	Modify recommended soldering pad	2023/10/19
8	Modify Luminous Intensity	2024/06/26
9	Modify Product name and Characteristics Graph	2024/11/27

Copyright © 2014, Everlight All Rights Reserved. Release Date: Nov.27.2024 Issue DSE-0028615 Ver.9