DATASHEET

EL 3535E
XI3535-W03501H-AM



Features

- Package：SMD EMC package
- Color Temperature range：3500 K ±250 K
- Typical Luminous Flux：100 lm @ 350mA
- Viewing angle：120º
- ESD : 8KV
- MSL : 2
- Qualifications：According to AEC-Q102 Rev A.
- Sulfur Test Class：A1.
- Compliance with RoHS and REACH.
- Compliance Halogen Free (Br <900 ppm, Cl <900 ppm, Br + Cl < 1500 ppm).

Applications

- Automotive interior lighting
- Day Time Running Light(DRL)

Contents

1. Characteristics 3
2. Absolute Maximum Ratings 4
3. Characteristics Graph 5
4. Binning Information 10
5. Part Number 13
6. Ordering Information 14
7. Mechanical Dimension 15
8. Recommended Soldering Pad 16
9. Reflow Soldering Profile 16
10. Packaging Information 17
11. Precaution for Use 19
12. Sulfur Test Criteria 20

Copyright © 2020, Everlight All Rights Reserved. Release Date: Oct.27.2022 Issue No: DSE-0025526 Ver.11

1. Characteristics

Parameter		Symbol	Min.	Typ.	Max.	Unit	Condition
Forward Current		I_F	50	350	500	mA	---
Luminous Flux		I_V	70	100	130	lm	I_F=350mA
Forward Voltage		V_F	2.5	3.1	3.5	V	I_F=350mA
Viewing Angle		φ	---	120	---	deg	I_F=350mA
Color Temperature		CCT	3250	---	3750	K	I_F=350mA
Thermal Resistance (Junction to Solder)	Real	$R_{th\ JS\ real}$	---	13	---	K/W	I_F=350mA
	Electrical	$R_{th\ JS\ el}$	---	10	---		

Notes:

1. Luminous Flux measurement tolerance: ±8%
2. The data of Luminous Flux measured at thermal pad=25°C
3. Forward voltage measurement tolerance: ±0.05V
4. Current pulse time: 25ms

Copyright © 2020, Everlight All Rights Reserved. Release Date: Oct.27.2022 Issue No: DSE-0025526 Ver.11

2. Absolute Maximum Ratings

Parameter	Symbol	Ratings	Unit
Power Dissipation	P_d	1750	mW
Max. DC Forward Current	I_F	500	mA
Surge current (t<=10 μs; D=0.005; T_s=25 ℃)	I_{FM}	2300	mA
Reverse Voltage	V_R	Not designed for reverse operation	V
Junction Temperature	T_J	150	°C
Operating Temperature	T_{opr}	-40 ~ +125	°C
Storage Temperature	T_{stg}	-40 ~ +125	°C
ESD Sensitivity (R=1.5kΩ, C= 100pF Condition)	ESD_{HBM}	8	kV
Soldering Temperature	Reflow	260°C for 30 sec	°C

Copyright © 2020, Everlight All Rights Reserved. Release Date: Oct.27.2022 Issue No: DSE-0025526 Ver.11

3. Characteristics Graph

Wavelength Characteristics Relative Spectral Distribution

@ Ts = 25°C, I_F=350mA

$$\Phi_V/\Phi_V\,(Max.) = f(\lambda)$$

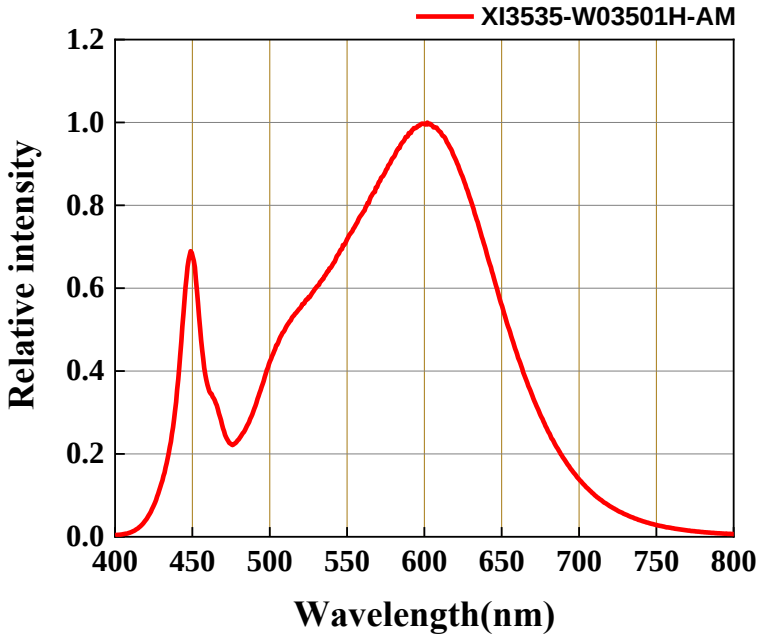

Typical Diagram Characteristics of Radiation

$$\Phi_V/\Phi_V\,(0^\circ) = f(\varphi)$$

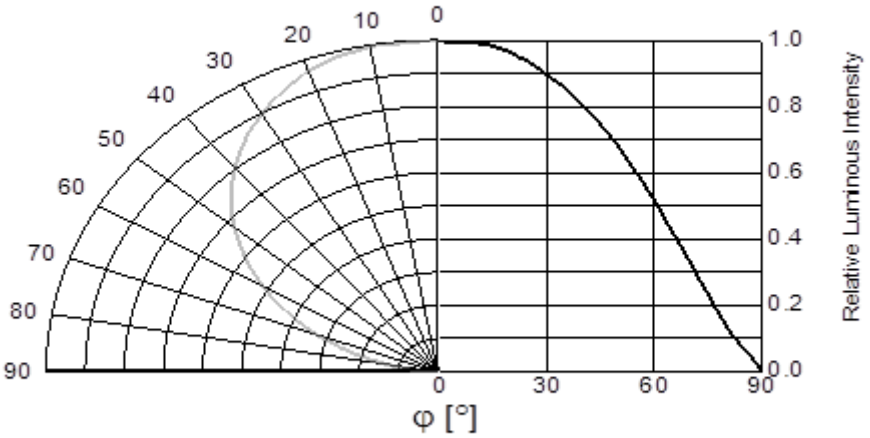

Notes:

1. φ is the off axis angle from lamp centerline where the luminous intensity is 1/2 of the peak value.
2. View angle tolerance is ± 5

Copyright © 2020, Everlight All Rights Reserved. Release Date: Oct.27.2022 Issue No: DSE-0025526 Ver.11

Forward Current vs. Forward Voltage
@ Ts = 25°C

$$I_F = f(V_F)$$

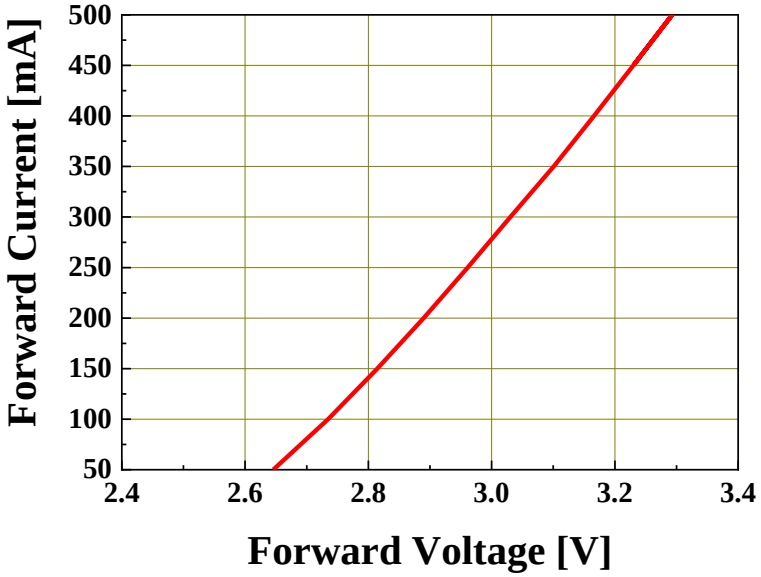

Relative Luminous Flux vs. Forward Current
@ Ts = 25°C

$$\Phi_V / \Phi_V(350mA) = f(I_F)$$

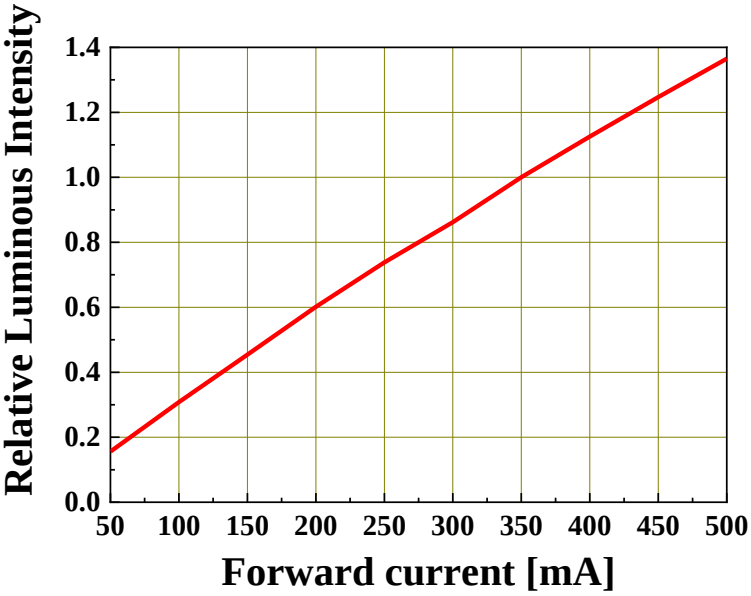

Copyright © 2020, Everlight All Rights Reserved. Release Date: Oct.27.2022 Issue No: DSE-0025526 Ver.11

Chromaticity Coordinates Shift vs. Forward Current
@ Ts = 25°C

$$\triangle CIE\ x, \triangle CIE\ y = f(I_F)$$

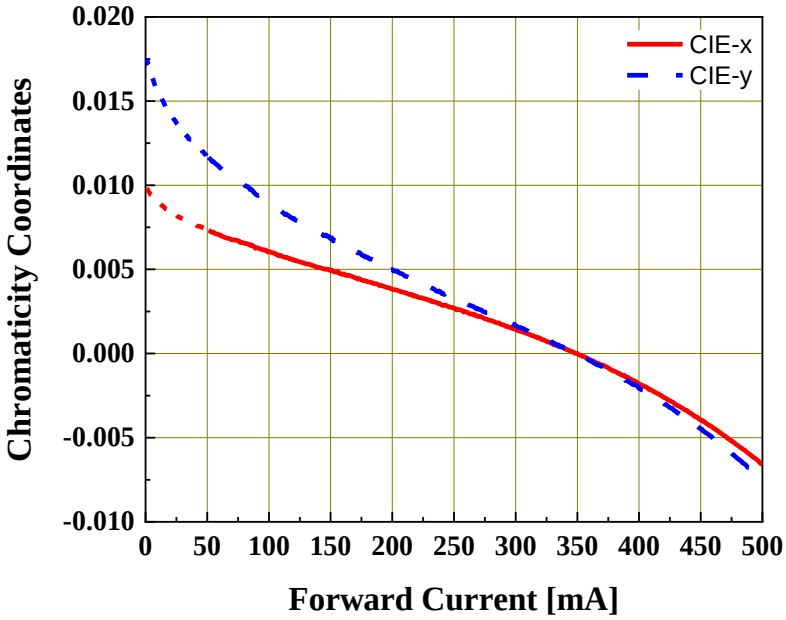

Relative Forward Voltage vs. Junction Temperature
@ IF=350mA

$$\Delta V_F = V_F - V_F(25^\circ C) = f(T_j)$$

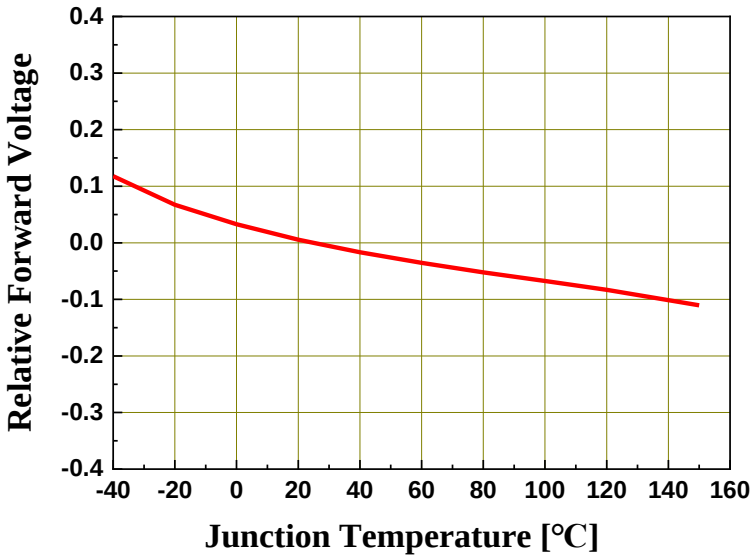

Copyright © 2020, Everlight All Rights Reserved. Release Date: Oct.27.2022 Issue No: DSE-0025526 Ver.11

Relative Luminous Flux vs. Junction Temperature

@ I_F=350mA

$$\Phi_V / \Phi_V(25^\circ C) = f(T_j)$$

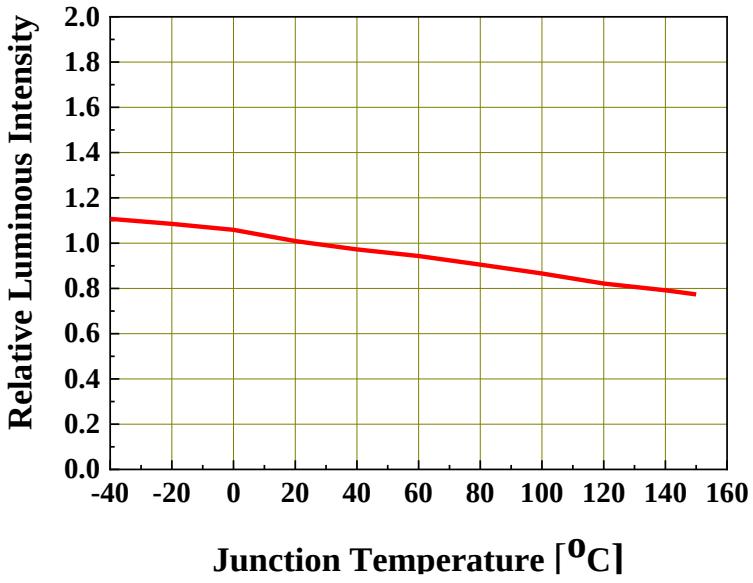

Junction Temperature vs. Chromaticity Coordinate

@ I_F=350mA

$$\triangle CIE\ x, \triangle CIE\ y = f(T_j)$$

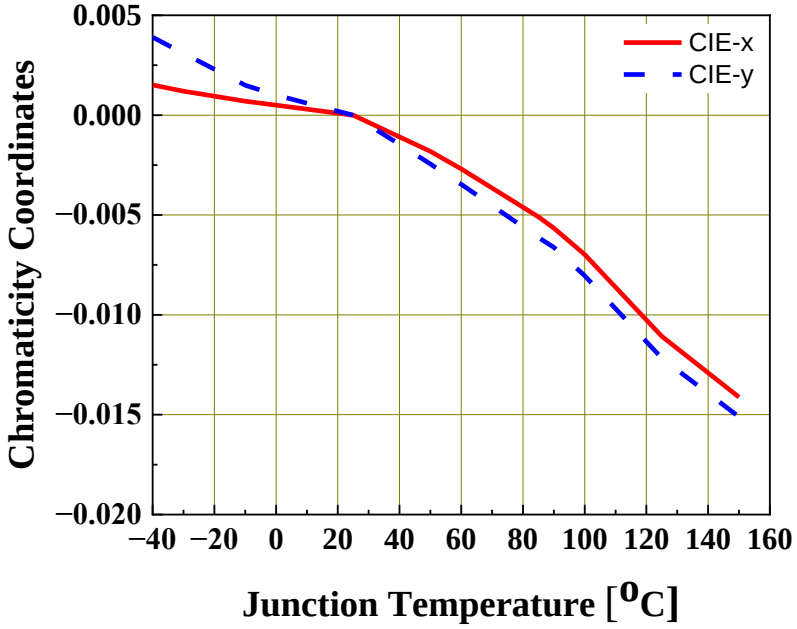

Copyright © 2020, Everlight All Rights Reserved. Release Date: Oct.27.2022 Issue No: DSE-0025526 Ver.11

Forward Current Derating Curve

$$I_F = f(T_S)$$

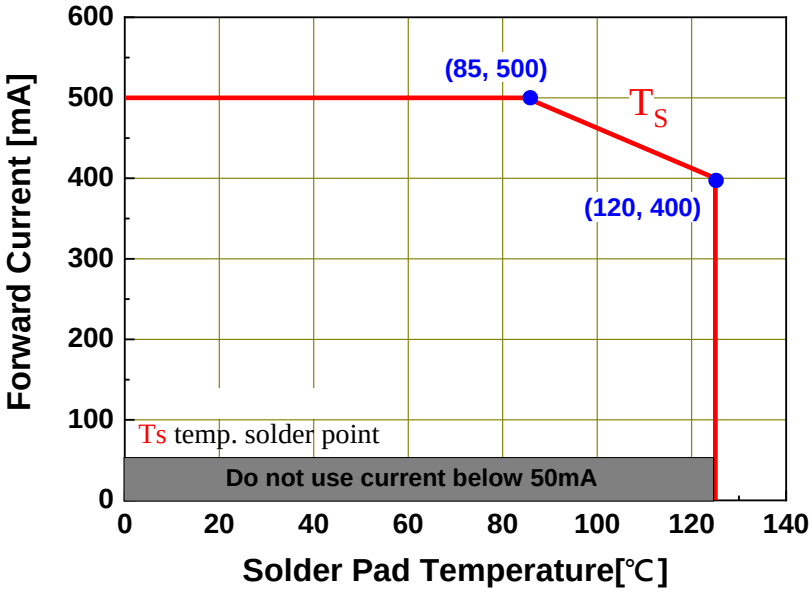

Permissible Pulse Handling Capability

D=Duty cycle , Ts = 25℃

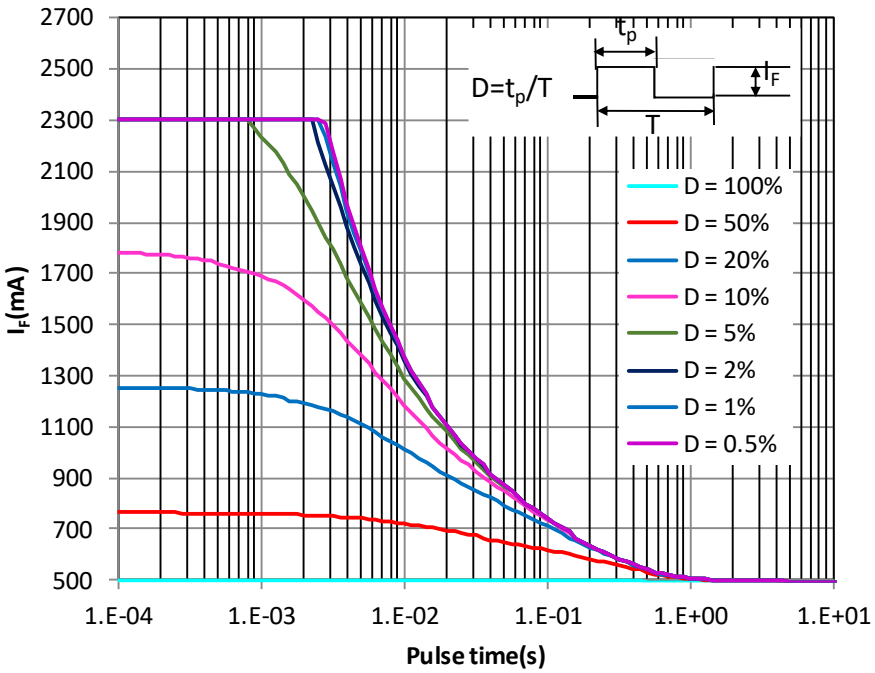

Copyright © 2020, Everlight All Rights Reserved. Release Date: Oct.27.2022 Issue No: DSE-0025526 Ver.11

4. Binning Information

Luminous Flux Bins

Bin code	Min. Luminous Flux (lm)	Max. Luminous Flux (lm)
F7	70	80
F8	80	90
F9	90	100
J1	100	110
J2	110	120
J3	120	130

Forward Voltage Bins

Bin code	Min. Luminous Flux (lm)	Max. Luminous Flux (lm)
2527	2.50	2.75
2730	2.75	3.00
3032	3.00	3.25
3235	3.25	3.50

Notes:

1. Luminous flux measurement tolerance: ±8%
2. Forward voltage measurement tolerance: ±0.05V
3. Current pulse time: 25ms

Copyright © 2020, Everlight All Rights Reserved. Release Date: Oct.27.2022 Issue No: DSE-0025526 Ver.11

Product Binning Color Bin Structure
ECE Bin Structure

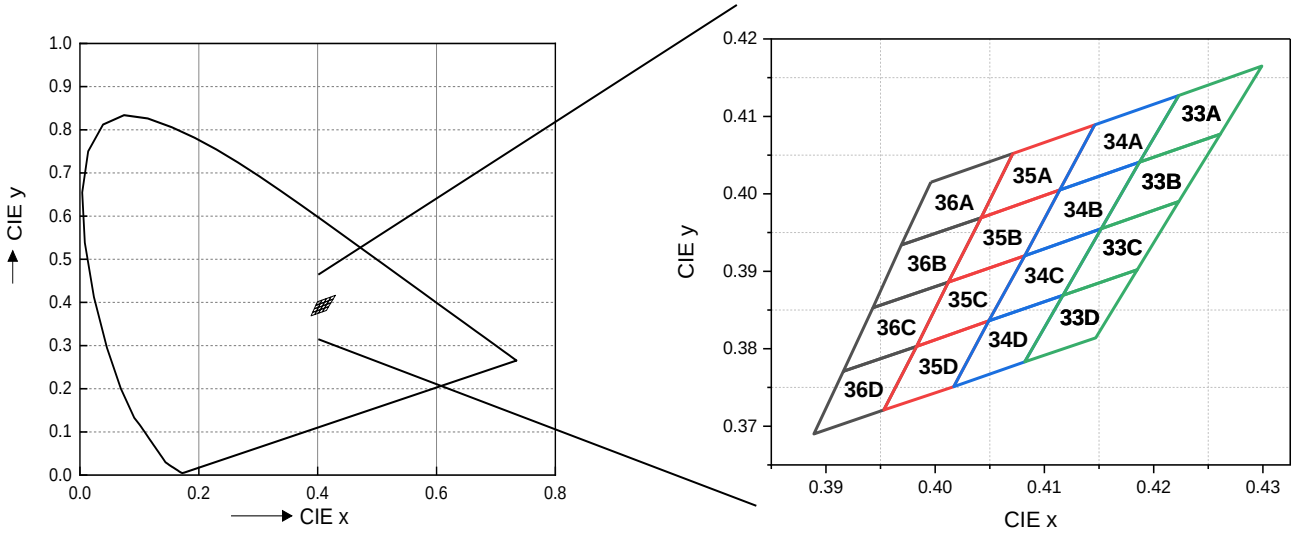

Warm White Bin Coordinates

Bin Code	CIE_x	CIE_y	Bin Code	CIE_x	CIE_y
33A	0.4223	0.4127	33B	0.4187	0.4041
	0.4187	0.4041		0.4152	0.3955
	0.4261	0.4077		0.4223	0.399
	0.4299	0.4165		0.4261	0.4077
33C	0.4152	0.3955	33D	0.4117	0.3869
	0.4117	0.3869		0.4082	0.3783
	0.4185	0.3902		0.4147	0.3814
	0.4223	0.399		0.4185	0.3902
34A	0.4146	0.4089	34B	0.4114	0.4005
	0.4114	0.4005		0.4082	0.392
	0.4187	0.4041		0.4152	0.3955
	0.4223	0.4127		0.4187	0.4041

Copyright © 2020, Everlight All Rights Reserved. Release Date: Oct.27.2022 Issue No: DSE-0025526 Ver.11

Bin Code	CIE_x	CIE_y	Bin Code	CIE_x	CIE_y
34C	0.4082	0.392	34D	0.4049	0.3836
	0.4049	0.3836		0.4017	0.3751
	0.4117	0.3869		0.4082	0.3783
	0.4152	0.3955		0.4117	0.3869
35A	0.4071	0.4052	35B	0.4042	0.3969
	0.4042	0.3969		0.4012	0.3886
	0.4114	0.4005		0.4082	0.392
	0.4146	0.4089		0.4114	0.4005
35C	0.4012	0.3886	35D	0.3983	0.3803
	0.3983	0.3803		0.3953	0.3721
	0.4049	0.3836		0.4017	0.3751
	0.4082	0.392		0.4049	0.3836
36A	0.3996	0.4015	36B	0.3969	0.3934
	0.3969	0.3934		0.3943	0.3853
	0.4042	0.3969		0.4012	0.3886
	0.4071	0.4052		0.4042	0.3969
36C	0.3943	0.3853	36D	0.3916	0.3771
	0.3916	0.3771		0.3889	0.369
	0.3983	0.3803		0.3953	0.3721
	0.4012	0.3886		0.3983	0.3803

Notes:

1. Color coordinates measurement allowance: ±0.005
2. Current pulse time: 25ms

Copyright © 2020, Everlight All Rights Reserved. Release Date: Oct.27.2022 Issue No: DSE-0025526 Ver.11

5. Part Number

XI3535-W03501H-AM

Part number is designated with below details.

XI3535 = Product family name.

W = Color [1]

0 = CRI (0=N/A ; >70%=7 ; >80%=8 ; >90%=9)

350 = Test current [mA]

1 = Lead Frame Type (0=Ag ; 1= Au: 2=MLP)

H = Brightness Level (H=High ; M=Medium ; L=Low)

AM = Automotive Application

Note
[1] Color：

Symbol	Description
C	Cool White
N	Neutral White
W	Warm White
PA	Phosphor Converted Amber
PR	Phosphor Converted Red
UB	Blue
IB	Ice Blue
SB	Sky Blue
UP	Purple
UG	Green
UY	Yellow
UA	Amber
UR	Red
SR	Super Red
RGB	RGB – Color
RGBY	RGBY – Color

Copyright © 2020, Everlight All Rights Reserved. Release Date: Oct.27.2022 Issue No: DSE-0025526 Ver.11

6. Ordering Information

Part Number of the EL 3535E	Order Code
XI3535-W03501H-AM	XI3535-W03501H-ABCDEFGHIJKL-MN-AM

Order code contains information with below details：

1.ABCD = min/max wavelength or CCT.

2.EFGH = min./max. luminous flux in [lm] or luminous intensity in [mcd].

3.IJKL= min./max. forward voltage.

4.MN = Packing code.

5.AM = Automotive Application.

Copyright © 2020, Everlight All Rights Reserved. Release Date: Oct.27.2022 Issue No: DSE-0025526 Ver.11

7. Mechanical Dimension

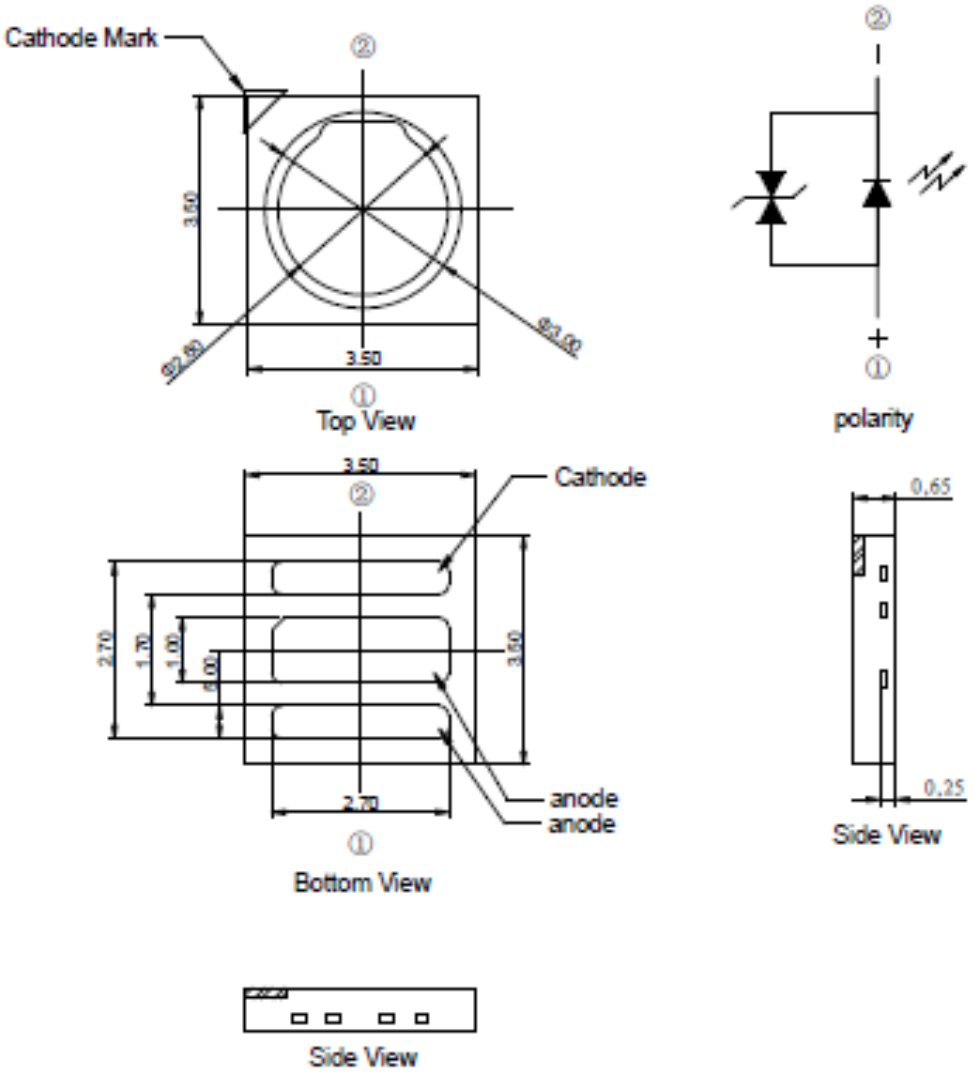

Notes:

1. Dimensions are in millimeters.
2. Tolerances unless mentioned are ± 0.1mm.

Copyright © 2020, Everlight All Rights Reserved. Release Date: Oct.27.2022 Issue No: DSE-0025526 Ver.11

8. Recommended Soldering Pad

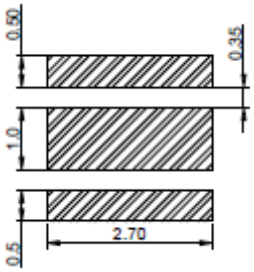

9. Reflow Soldering Profile

Soldering Condition (Reference: IPC/JEDEC J-STD-020D)

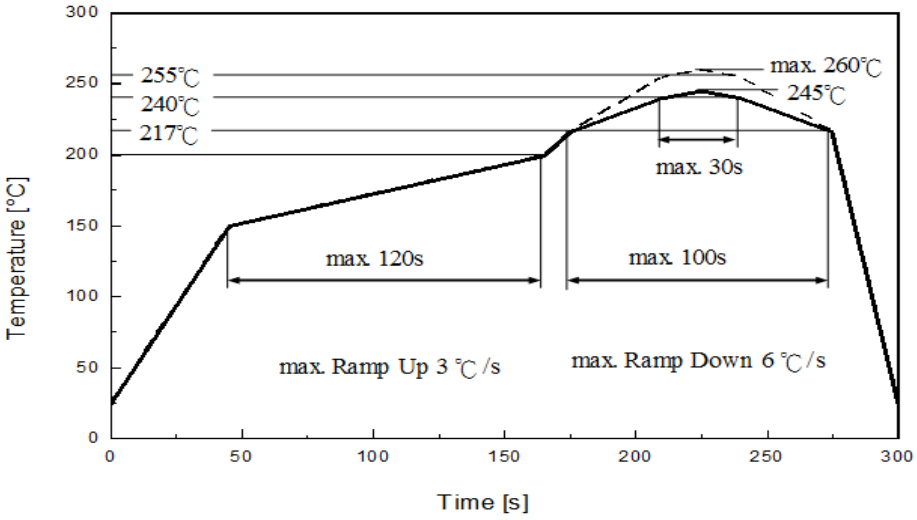

Profile Feature	Pb-Free Assembly Recommendation	Unit Einheit
Ramp-up rate to preheat 25 °C to 150 °C	3	°C /sec
Time of soaking zone 150 °C to 200 °C	120	sec
Ramp-up rate to peak	3	°C /sec
Liquidus temperature	217	°C
Time above liquidus temperature	100	sec
Peak temperature (max.)	260	°C
Time within 5°C of the specified peak temperature	30	sec
Ramp-down Rate (max.)	6	°C /sec

Copyright © 2020, Everlight All Rights Reserved. Release Date: Oct.27.2022 Issue No: DSE-0025526 Ver.11

10. Packaging Information

• Product Labeling

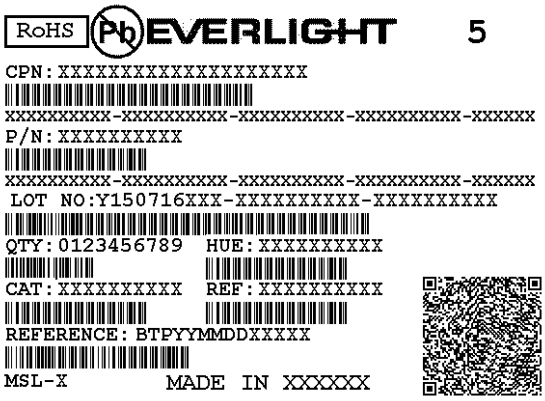

- CPN：Customer's Product Number
- P/N：Everlight Part Number
- QTY：Packing Quantity
- CAT：Luminous Flux (Brightness) Bin
- HUE：Color Bin
- REF：Forward Voltage Bin
- LOT No：Lot Number

• Carrier Tape Dimensions: Loaded Quantity 2000 pcs Per Reel

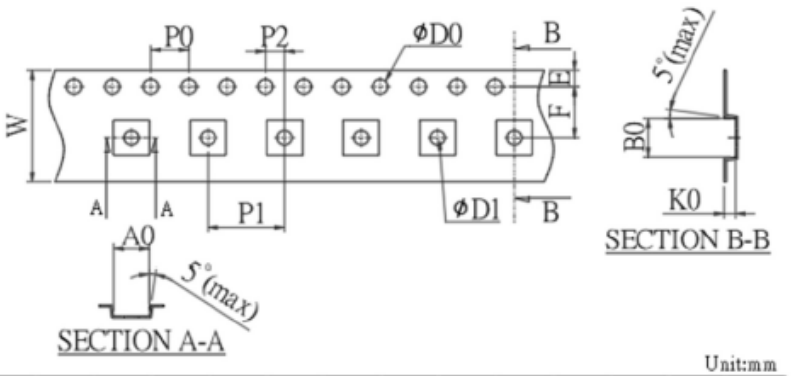

Unit:mm

ITEM	Ao	Bo	Ko	Po	P1	P2	Do	D1	E	F	W	T	10Po
DIM	3.80	3.80	0.95	4.0	8.0	2.0	1.50	1.50	1.75	5.50	12.0	0.20	40.0
TOLE	±0.05	±0.05	±0.05	±0.10	±0.10	±0.05	+0.1 -0	MIN	±0.10	±0.10	±0.10	±0.05	±0.20

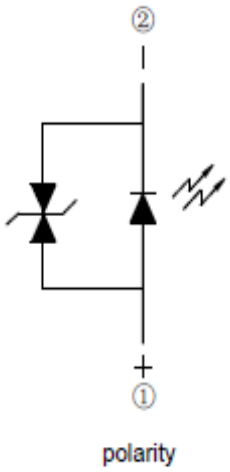

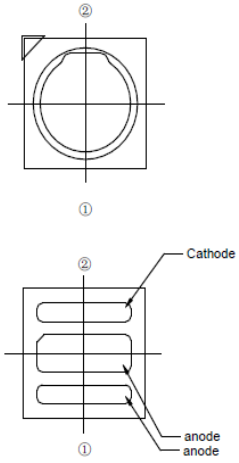

Notes:

- Dimensions are in millimeters.

Copyright © 2020, Everlight All Rights Reserved. Release Date: Oct.27.2022 Issue No: DSE-0025526 Ver.11

Reel Dimensions

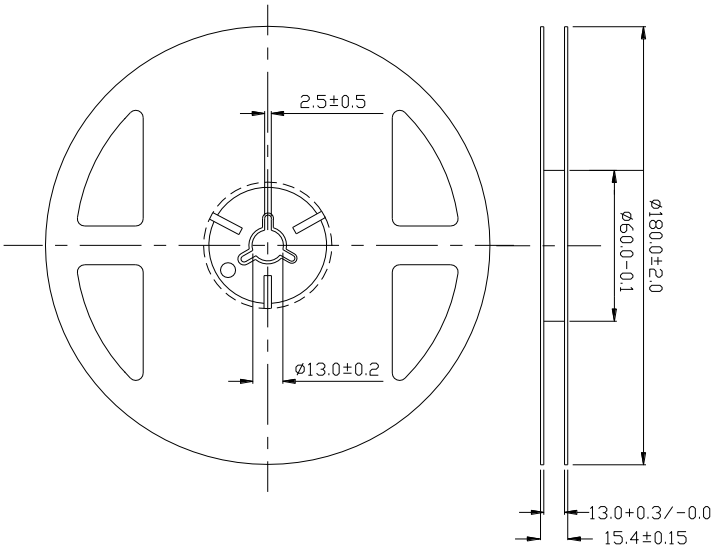

Notes:

1. Dimensions are in millimeters.

• Moisture Resistant Packing Process

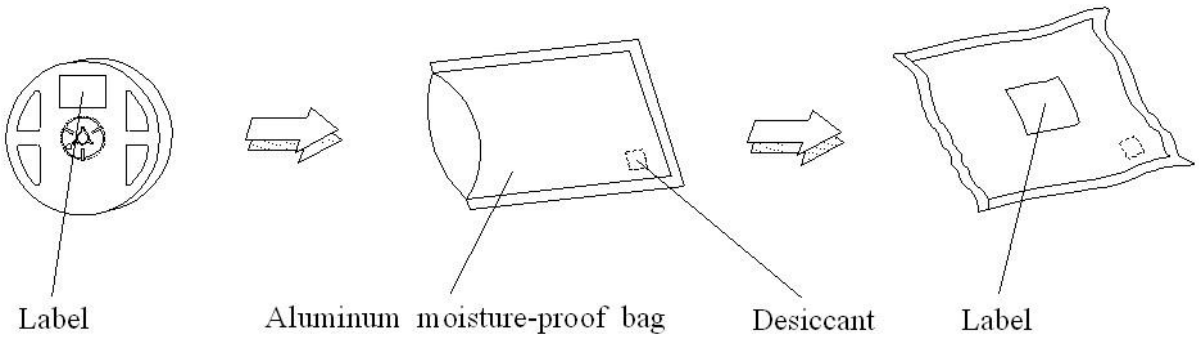

Notes:

1. Dimensions are in millimeters.

Copyright © 2020, Everlight All Rights Reserved. Release Date: Oct.27.2022 Issue No: DSE-0025526 Ver.11

11. Precaution for Use

1. Over-current-proof
   Customer must apply resistors for protection; otherwise slight voltage shift will cause big current change (burn out will happen).

2. Assemblies
   Do not stack assemblies containing LEDs to prevent damage to the optical surface of LEDs. Forces applied to the optical surface may result in the surface being damaged. The force during pick and place should not exceed 2.0N.

3. Soldering Condition
   3.1 When soldering, do not put stress on the LEDs during heating.
   3.2 After soldering, do not warp the circuit board.

4. Soldering Iron
   Each terminal is to go to the tip of soldering iron temperature less than 350℃ for 3 seconds within once in less than the soldering iron capacity 25W. Leave two seconds and more intervals, and do soldering of each terminal. Be careful because the damage of the product is often started at the time of the hand solder.

5. Repairing
   Repair should not be done after the LEDs have been soldered. When repairing is unavoidable, a double-head soldering iron should be used (as below figure). It should be confirmed beforehand whether the characteristics of the LEDs will or will not be damaged by repairing.

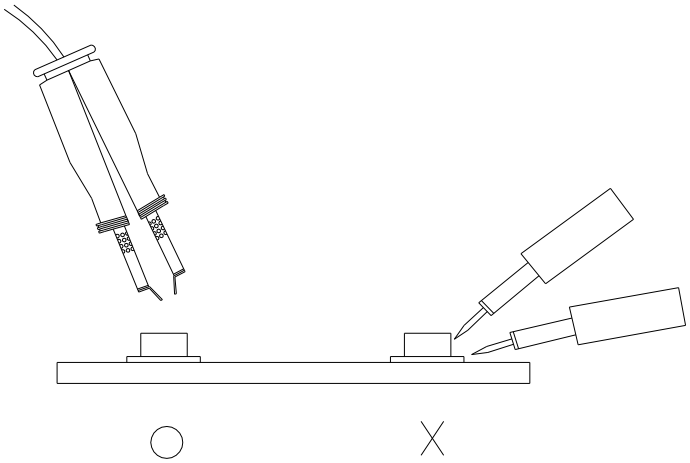

Copyright © 2020, Everlight All Rights Reserved. Release Date: Oct.27.2022 Issue No: DSE-0025526 Ver.11

12. Sulfur Test Criteria

Products	Failure Criteria
Exterior Lighting products	Luminous Flux +/-20%, forward voltage +/-10%, color coordinates x, y +/-0.01, color wavelength +/- 2 nm Visual defect issue following Everlight's inspection criteria
Interior lighting products	Luminous Flux +/-30% or +/-50% for some application, forward voltage +/-10%, color coordinates x, y +/-0.02, color wavelength +/- 2 nm Visual defect issue following Everlight's inspection criteria

H2S test	Grade A0	Grade A1	Grade B0	Grade B1
Class A	Pass ΔIV, ΔColor, ΔVF criteria No Corrosion	Pass ΔIV, ΔColor, ΔVF criteria Corrosion without the impact on reliability and lifetime		
Class B			Pass ΔIV, ΔColor, ΔVF criteria No Corrosion	Pass ΔIV, ΔColor, ΔVF criteria Corrosion without the impact on reliability and lifetime

Condition for H2S and FMG	Description	
	H2S	FMG
Class A	15 ppm with duration 336 h at 40 °C and 90% RH	Duration 500 h at 25 °C and 75% RH. H2S concentration: 10ppb SO2 concentration: 200ppb NO2 concentration: 200ppb Cl2 concentration: 10ppb
Class B	10 ppm with duration 500 h at 25 °C and 75% RH	

Grade for H2S Test	Description
0	No Corrosion
1	Corrosion without the impact on reliability and lifetime

Copyright © 2020, Everlight All Rights Reserved. Release Date: Oct.27.2022 Issue No: DSE-0025526 Ver.11